JINZHIFENG

津之缝

BAG CLOSING MACHING HEAD
缝包缝纫机

GK35系列

INSTRUCTION MANUAL / PARTS LIST
使用说明书 / 零件分解图

MODEL

GK35-2C
GK35-2S
GK35-6A
GK35-6AS
GK35-7
GK35-8
GK35-8A

For Openrator Safety

Thank you for purchasing the JINFENG Model GK35 Bag Closing Machine Head.

○ This munual book contains instructions and precautions for using the Model GK35 Bag Closing Machine Head. Be sure to read and understand the manual book before using the machines.

○ Keep this manual book near the sewing machine for reference. Be sure to attach this manual book to the machine when lending or transfer it to another person or company.

○ Please contact this manual book from nearest JINFENG office if it lost.

○ The contents of this manual book are subject to change without prior notice for improvement and safety purpose.

Instructions with this mark are especially important for operator safety. Be sure to observe these maeked instructions.

Hazard of Being Caught in the Machine

● Be careful, when you insent material to be closed into the sewing machine, your fingers may be caught in the machine between the presser foot and the feed dog.

● A "Hazardous" mark is attached to the machine. When sewing, be sure not to touch on the machine.

Hazard of Being Caught in the Machine

● A Needle Bar and Needle Thread Take-Up are moving at high speed . A "Hazardous" mark is attached to the machine When the machine is in operation ,keep fingers and yourself away from the Needle Bar and Needle Thread Take-Up.

安全操作

感谢您购买津缝牌GK35系列缝包机。

○ 该说明书介绍GK35系列缝包机的使用方法和注意事项。在使用机器前，务必阅读该使用说明书，并充分理解其内容，以保证能够正确使用机器。

○ 为了便于使用，请将该说明书放置于缝包机旁边。转让 GK35 系列缝包机时，请随机附带该说明书。

○ 遗失该说明书时，请联系我公司或者经销处。

○ 为提高功能及安全性，本说明书有可能会在不预先通知的情况下进行改动。

此危险标记，在安全操作上特别重要，请务必遵守。

卷入注意

● 当将缝料塞入机器缝纫时，要当心手指被送料牙和压脚卷入。缝纫机上贴有卷入注意标记，缝纫时手应从缝纫机下侧扶住缝料，不要接触机器。

卷入注意

● 机器工作时，针杆与针杆连轴节组件处于高速运动 状态，在缝纫机 上贴有夹如注意标记，缝纫时，手和身体不要与针杆和针杆连轴节组件接触。

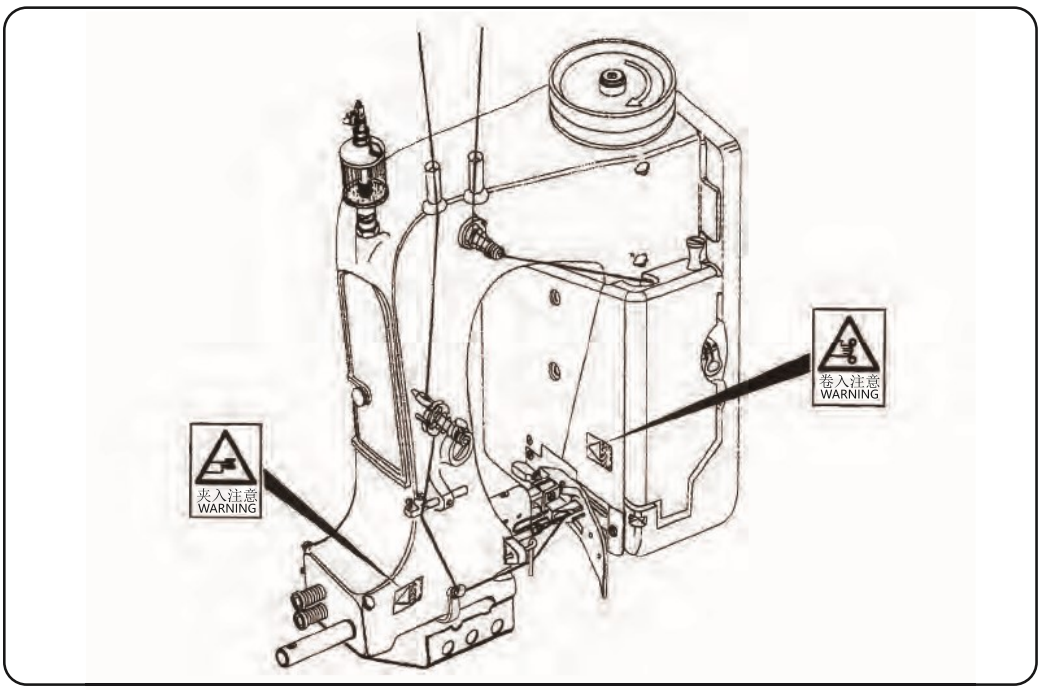

WARNING

PERSONAL INJURY MAY RESULT IF THE FOLLOWING SAFETY PRECAUTIONS ARE NOT OBSERVED.

1. BE SURE THE AREA SURROUNDING MACHINE IS FREE OF ALL HAZARDS SUCH AS FIRE, WATER, OIL, RUBBISH OR ANYTHING THAT CAN CAUSE INJURY.
2. DO NOT OPERATE MACHINE IN AN EXPLOSIVE AREA OR UNDER WET CONDITIONS.
   THE MACHINE IS NOT AN EXPLOSION-PROOF TYPE NOR A WATER-PROOF TYPE.
3. DO NOT OPERATE MACHINE BEFORE READING INSTRUCTION MANUAL.
4. DO NOT OPERATE MACHINE ON VOLTAGES OTHER THAN SPECIFIED FOR THE MACHINE.
5. BE SURE MACHINE IS CONNECTED TO BUILDING ELECTRICAL SAFETY GROUND (EARTH).
6. BE SURE POWER (AND AIR SUPPLY) IS OFF BEFORE PERFORMING MACHINE MAINTENANCE, PARTS EPLACEMENT, ADJUSTMENTS OR CLEANING.
7. DO NOT OPERATE MACHINE WITH GUARDS AND COVERS REMOVED.
8. DO NOT TOUCH NEEDLE, PULLEY, BELT AND MOVING PARTS WHEN MACHINE IS IN OPERATION.
9. BE SURE MACHINE IS PLACED ON A SMOOTH (LEVEL) SURFACE WHEN PERFORMING MAINTENANCE , PARTS REPLACEMENT, ADJUSTMENTS, CLEANING OR STORAGE.
10. BE SURE THE MATERIAL TO BE SEWN OR CLOSED COMPLIES WITH THE MACHINE SPECIFICATIONS.
11. DO NOT USE SPARE PARTS OTHER THAN "JINFENG" GENUINE PARTS.

警 告

如果不遵守下列安全项目，就会引发事故，请务必注意。

1. 请确认机器周围没有引发事故的火、水、油以及其他易燃物。
2. 不要在有潜在爆炸风险或潮湿的环境中使用该机器。本机器不属于防爆、防水型。
3. 务必认真阅读本说明书后再使用机器。
4. 不要在指定电压以外的电气环境下启动机器。
5. 确认地线已经有效接地。
6. 在维护、零件调换、调试或者清扫之前，必须先切断电源（以及气源）。
7. 不得在取下盖板和罩子的状态下启动机器。
8. 机器运转过程中，不得用手触摸机针、皮带轮、皮带以及其他运转部件。
9. 在维护、零件调换、调试、清扫或者保存时，请放置在平整的场地上。
10. 检查一下要缝制的坯料是否符合机器规格。
11. 必须使用正规的机器零件。

Identifying and Ordering Parts

Where the construction permits, each part is stamped with its part number. On all orders, please include part number, part name and model name of the machine.

Safety Rules

To prevent personal injury:

- All power source to the machine must be turned off before threading, oiling, adjusting or replacing parts.
- All covers and guards must be in position before operating machine.
- Do not tamper with safety cover, guards, etc., while machine is in operation.

售后服务

零部件调换和订货上的注意事项

- 本公司常年供应正规的GK35系列零件。用户若向非本公司授权的经销商购买时需谨防假冒。
- 订货时，请注明零件分解图一览表的零件号及名称。
- 使用过程中，遇到不明处及故障、疑点、维护问题，请与供应商或本公司联系。届时，请说明机器型号、缝纫机头名及缝纫机编号。

Cautions When Using the Machine

Safety Precautions

1) Always turn power off before threading, oiling and adjuting the machine or replacing parts.
2) Wear safety glasses.
3) Make sure, before starting the machine, that all covers and shields are in place and closed.
4) Do not touch on the machine when it is run.
5) Turn power off and make sure the cutter does not operate before you put your finger under the cutter blades and the needles to adjust.
6) Do not touch on the machine when it is run.

使用时的注意事项

安全方面

1) 穿线、给油、调试、零件调换以及保养检修之前必须关闭电源。
2) 调试作业时，最好使用安全眼镜。
3) 运转前，必须将所有盖板、罩壳紧固好。
4) 在确认盖板等已关闭之后再启动。
5) 将手深入机针、切刀下面调试前，必须先关闭电源，确信机针与切刀都停止动作后再进行作业。
6) 缝纫线运转过程中，不要触摸机器运转部位。

Maintenance

- Please keep in mind to handle the mache carefully and to maintain the machine in good condition.
- Thread fuzz or dust must be cleaned with air or brush on throat plate, in the groove of feed dog or around looper after the day's work.
- Wipe the area easy to rust with oil cloth.
- Check the machine for loose screws and tighten them. if any, once a month.
- Good maintenance will prolong the machine life.

维护保养

- 缝纫机头由精密的小零件构成，除了当心使用之外，还要经常注意保养。
- 一天作业结束之后，应将针板上、压脚槽内以及弯针周围积存的尘埃等清除干净。
- 容易生锈的部分请用油布等擦净。
- 每月一次，检查螺丝是否松动。
- 维护保养的好坏关系到仪器的寿命，应予以注意。

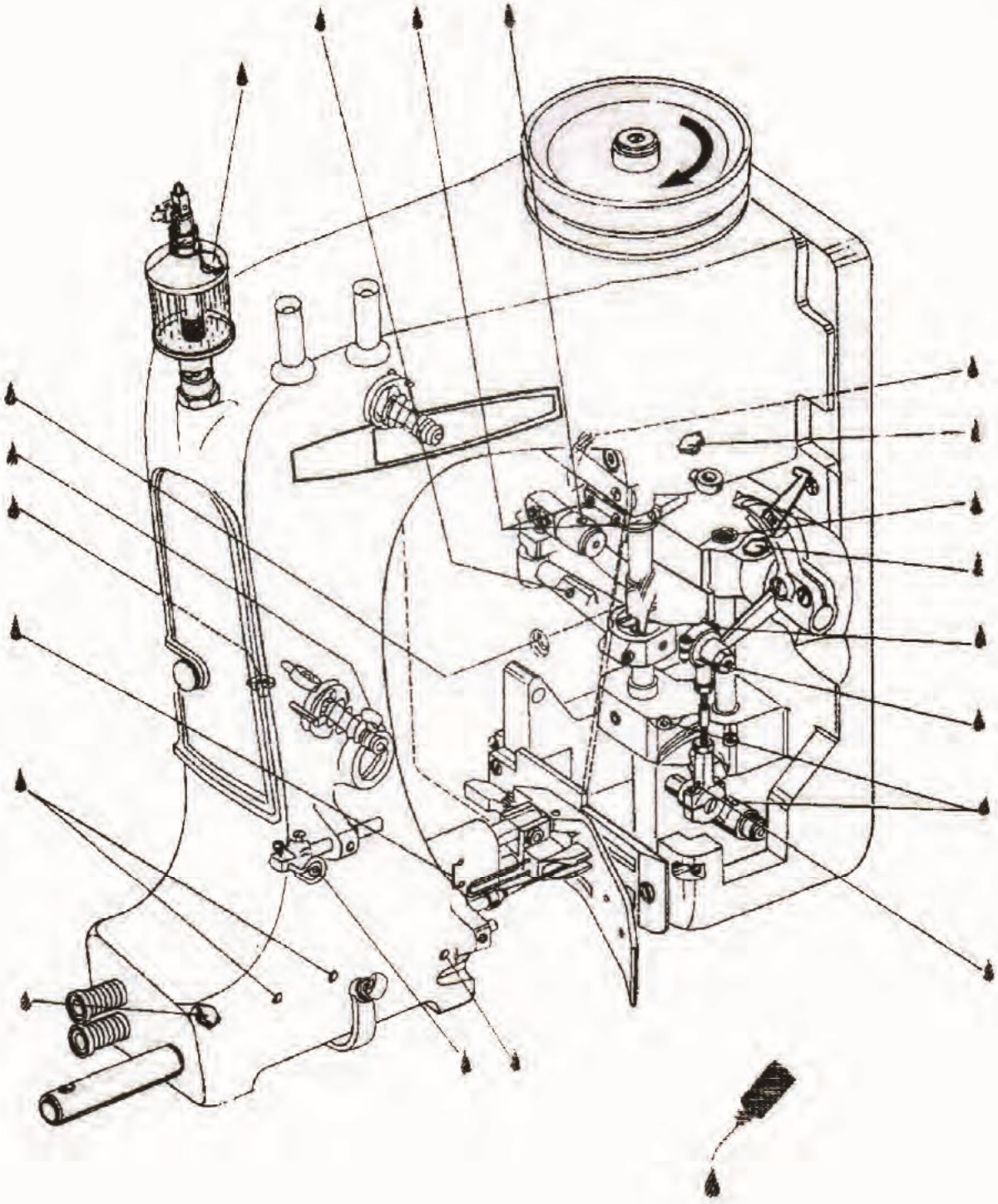

润滑点
Lubricating Points

Fig.1

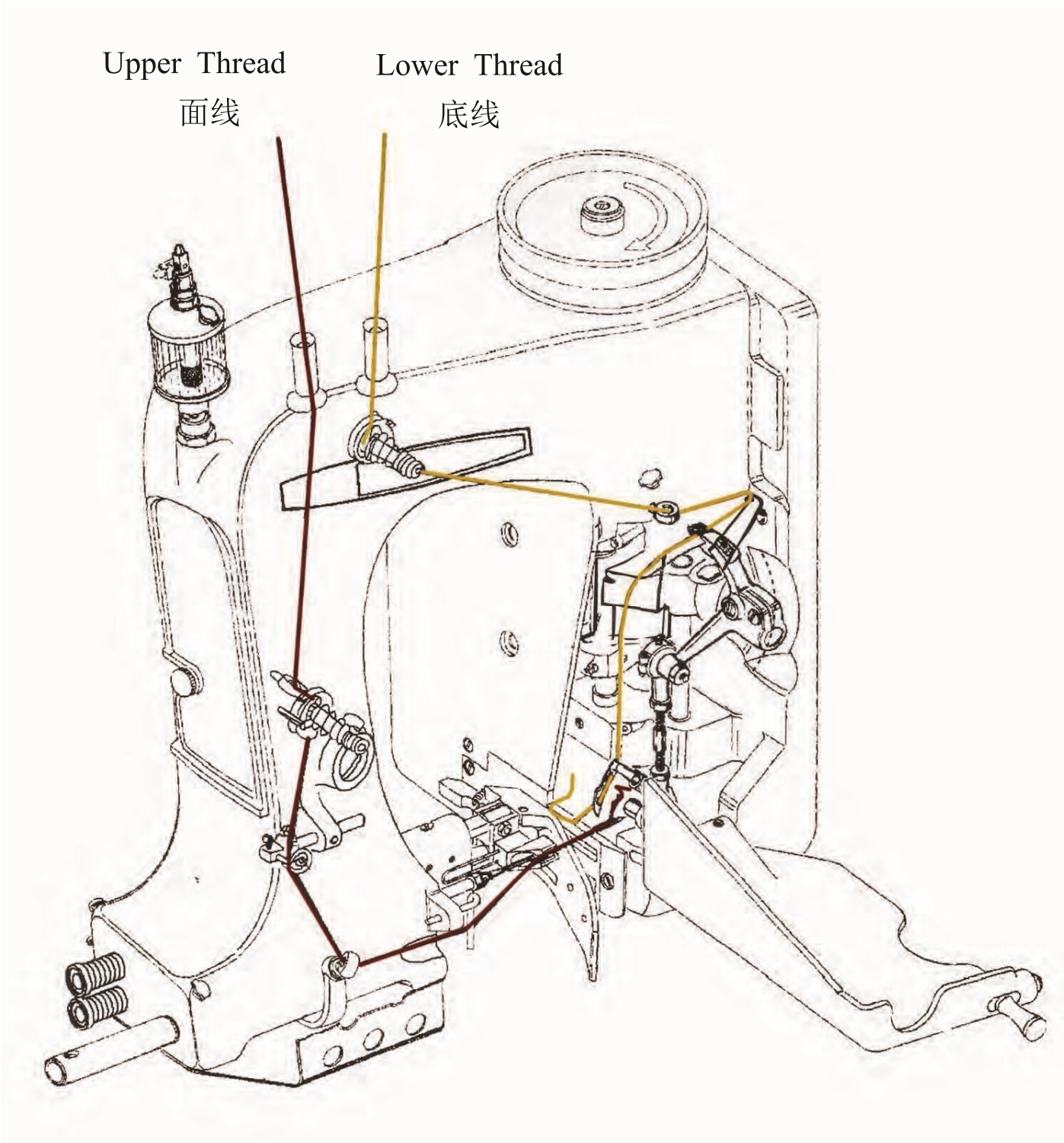

Fig.2

CONTENTS 目 录

1.Characteristics and Applicaions / 特点与用途

Model GK35 Bag Closing machines fall into two types. The semi-auto type adopts foot switch to control the start-stop and artificial auxiliary cuts threads. The auto type adopts a MCU controller and sensor to control the start-stop & auto cutting threads via an air cylinder.

All these machines adopt semi-closed structure for easy maintenance. Crankshaft tail end adopt closed rolling bearing mechanism for the purpose of high speed, wear resistance and flexibllity. Lubrication system is the conbination of oilcan continuous oil injecting and felt reserves lubricating oil. The key parts are made of high-quality copper alloy and alloy steel. Various types of bag closing machine head are hung on the column frame to cooperate with the conveyor. This series of machines can be used for sealing and sewing of woven bags, paper-plastic composite bags, sacks and other packaging bags of grain, feed, sugar, petrochemical, port and wharf enterprises.

GK35 系列缝包机分为脚踏开关控制启停机、机械式半自动剪线和光电开关控制启停机、气动切刀自动切线两个类别。各个类别中又分为单机针缝纫机和双机针缝纫机两种。

该系列机器均采用维修方便的半封闭式结构，曲轴尾端采用封闭式滚动轴承结构以达到高速、耐磨、灵活之目的。润滑滑系统为滴注油杯渗透毛呢贮油式，关键部位采用优质铜合金和合金钢等高耐磨材料。各种型式的机头悬挂在立柱架上与输送机配合起来使用。可作为粮食、饲料、糖业、石化、港口码头等企业的编织袋、纸塑复合袋、麻袋等包装袋的封口缝纫之用。

2.Specification / 规格

Item 项目 / Model 机型	GK35-2C	GK35-2S	GK35-6A	GK35-6AS	GK35-7	GK35-8A	GK35-8
Max.Speed 最高缝纫速度	1900 rpm						
Working.Speed 工作速度	1700 rpm						
Thickness of Material 最大缝纫厚度	8mm						
Range of Stitch Width 针迹宽度调整范围	6.5~11mm						
Stitch Type 线迹形式	Double Thread Chain Stitch 双线链式(401)					Four Thread Chain Stitch 双线四针链式(401)	
Thread Type 线迹规格	21s/5，20s/3 Polyster Thread 21s/5，20s/3 涤纶线						
Needie 机针规格	Model 80800 200~250# 80800型号200~250#					Special Needles 专用机针	
Pulley 带轮	Φ114mm						
Thread Chain Cutter 线辫切割形式	Manual Operated 手控机动式		Electro-pneumatia Operated 电控气动式				Manual Operated 手控机动式
Feed Drive Mechanism 送料方式	Feed Dog 送料牙	Synchronous 送料牙+压脚	Feed Dog 送料牙	Synchronous 送料牙+压脚	Feed Dog 送料牙		
Matched Motor Required 配套电机要求	三相4P 370W						
Weight 重量	29kg		32kg				29kg
Size(L×W×H)(mm) 外形尺寸（长×宽×高）	350×215×440		370×220×440				350×215×440

3.General Desciption / 说明

Model GK35-2C / GK35-8

These models are equipped with a mechanical threads cutter which reciprocates with the operation of thechine. After sewing the opening of the bag into the machine, continue to sew out a section of braid. Hold the sewing material handle to push the braid into the opening groove of the needle plate, and the reciprocating cutter can cut the braid. The start and stop of the machine is operated manually.

Gk35-2c is single needle type. Gk35-8 is double needle type with two stitches at a time.

GK35-2C型 /GK35-8型

装有机械式随机器运转而往复动作的线辫切刀。送入机器的包装袋缝完袋口后，再继续缝出一段线辫。手持缝料把线辫推针板的开口凹槽内，往复动作的切刀即可将线辫剪断。机器的启动与停止由人工操作。

GK35-2C 为单针型。GK35-8 为双针型，一次缝两趟线。

Model Gk35-6A / GK35-7/gk35-8A

* External pneumatic cutter mechanism.
* Infrared sensor type, automatic control the start - stop -cutting thread working cycle.

GK35-6A/ GK35-7/GK35-8A型

* 外挂式气动切刀机构。
* 红外传感式自动控制开机-停机-切线的工作循环。

Model GK35-2S / GK35-6AS

* Up and lower feeding mechanism, feed bags synchronously, suitable for multi-layer plastic bag sewing.
* GK35-2S is semi-automatic type and gk35-6AS is automatic type.

GK35-2S/GK35-6AS型

* 上下同步送料机构，适合多层覆膜袋缝纫。
* GK35-2S为半自动型，GK35-6AS型为自动型。

Notice: These models cylinder working pressure is 0.4~0.6Mpa.
These models control systems need additional optiomal from jinzhifeng company.

注意：以上机型气缸工作气压均为0.4~0.6Mpa。
以上机型控制系统可另外向津之缝公司订购。

4. The Points Before Operation / 使用前应注意事项

New machines or through long time storage machines must be checked before operation. Cleaning the anti-rust grease and dust on the surface of the machine, and filling sewing machine oil or white spindle oil 60# into oil cups and oil holes. Turning the pulley clockwise by hand. Check for free and coordination. Check motor rotating direction for the same as that of the machine running. Then starting the machine for test sewing.

For automatic style machine, check electrical equipments, circuits and pneumatic cells whether they are good. Before threading, filling, oiling, adjusting or replacing parts, all power source must be cut off to prevent personal injury.

新的或存放已久的机器，在使用前应作一次常规性检查，清除表面尘埃和防锈油脂，并在油杯和各油孔处注入缝纫机油或 20# 机油。用手顺时针旋转皮带轮，检查运转是否灵活协调，检查电动机旋转方向是否与机器运转方向一致，然后再启动机器进行试缝。

自动型的机器必须检查电气、线路及气动元件是否完好，在穿线、注油、调试或更换零件前须切断电源，以免发生触漏电及其他伤害事故。

5. Lubricating / 润滑

Lubrication requirements

Routing maintenance is important to prolong the machine life. Machines have to be cleaned and lubricated twice a day at the lubricating points according to the oiling diagram (Fig. 1), making oil felt soaked in oil. The sight feed oiler and oil sprayer have to be kept filled and should be adjusted so that it feeds two or three drops of oil per minute.

润滑要求

重视机器保养，可延长使用寿命。每个工作班必须对机器进行清洗，并且按照示意图（图 1）所示润滑点进行注油 2 次，并使羊毛毡吸足油。使用随机器带的油枪对润滑点注油润滑，另外将滴注油杯注满油，并调整至每分钟滴 2 至 3 滴润滑油。

Lubrication requirements

Raise the handle to make it upright, the needle valve is lifted, and the lubricating oil will slowly flow into the machine from the oil hole through the oil filter. The amount of oil supply can be adjusted by the nut under the handle. When oil supply is not needed, lay the handle flat and the needle valve will block the oil hole. The structure of the oil cup is shown in Figure 3.

滴注油杯的使用方法

扳起手柄使之直立，针阀被提起，润滑油会经过油滤从油孔缓慢地流入机器内部，供油量的大小可通过手柄下方的螺母进行调节。不需要供油时，将手柄平放，针阀即堵住油孔。油杯结构如图3所示。

Lubrication requirements

The lubricating oil can be lubricated with low viscosity automobile oil at least twice a day; sewing machine oil can also be used for lubrication, but the lubrication frequency should be increased at least 4 times a day.

润滑油的选择

润滑油采用粘度较小的汽车机油就可以，每天润滑至少 2 次；也可以采用缝纫机油润滑，但是要增加润滑频率，每天至少 4 次。

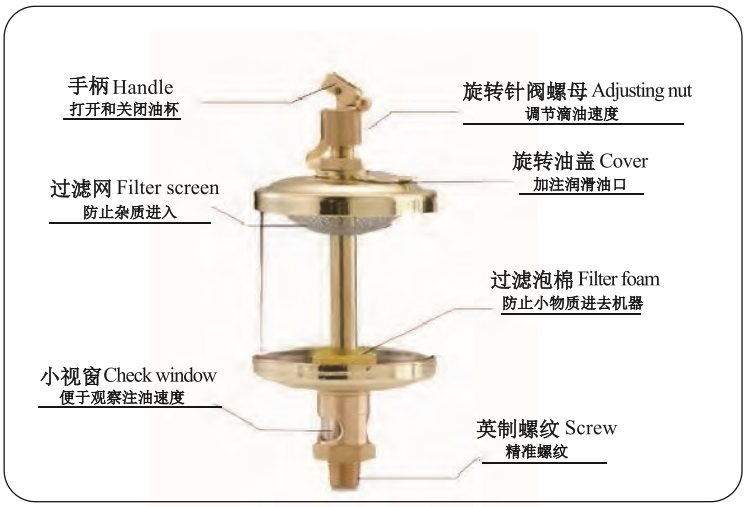

Fig.3

6. Needle Thread and Threading / 机针、缝线与穿线

Selection of needle and thread depends on quality and technical demand of sewing material. Good combination of the needle and thread is one of the basic condition to get perfect sewing performance. The needle point must be sharp, and the thread must be strong enough.

Thread the machine as illustrated in Fig. 2, draw out upper and lower thread from needle eye and looper hole about 50mm.

机针和缝线的选择应根据缝料的质量与技术要求而定，机针与缝线相匹配是获得正常缝纫性能的基本条件之一。机针尖应锋利，缝线应有足够的强度。

按（图 2）所示顺序进行穿线，面线与底线拉出机针眼及弯针孔各约 50㎜ 左右即可。

7.Needle replacement and installation / 机针的更换与安装

The needle is a fragile part. When the eye of the needle is obviously worn and the needle tip is blunt or bent, the needle should be replaced. When changing the needle, rotate the pulley to raise the needle bar to the highest point, loosen the nut A (Figure 4) with a wrench and replace with a new needle. The needle handle must be inserted into the needle bar hole and must be inserted to the end. The concave surface of the needle hole must toward the direction of the moving bags. then tighten the nut A.

Note the following:

① If the needle handle is not inserted to the end, or the needle is installed reversely, it will cause thread breaking up or skipping.

② The needle is a key part, therefore the original high-quality needle should beused.

③ The matching of the needle and the sewing thread is one of the basic conditions for normal sewing performance. The principle of needle selection: thick needles for thick threads and thin needles for thin threads.

机针是易损零件，当针眼明显磨损，针尖磨钝或弯曲时，应更换机针。换针时，旋转皮带轮使针杆上升到最高点，用扳手拧松螺母 A(图 4)换上新针，针柄必须插入针杆孔，**必须插到底，针眼的凹形面必须朝缝料前进方向**，再固紧螺母。

注意以下几点：

① 机针针柄没有插到底、机装反均会引起断线或跳线故障。

② 机针是关键零件，应选用原厂优质机针。

③ 机针与缝线的匹配是正常缝纫性能的基本条件之一。机针选用原则：粗线用粗针、细线用细针。

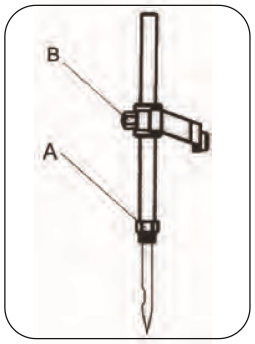

Fig.4

8.Adjusting / 调试

(1) Looper

a. First, set the looper connecting rod A(Fig 5). So the distance X(Fig.5) between the centre lines of the two ball joints is 69.8mm. For adjustment, loosen the two nuts B and turn connecting rod A forward or backward as required to obtain specified dimension. Retighten nuts B.

Caution: the nut on the left is left-hand thread

b. Rotate the machine pulley clockwise by hand, so that the needle bar moves to the lowest point, at the same time the looper moves back to its farthest position to the right. The distance from the point of the looper A (Fig. 6) to the centreline of the needle is 8mm. For adjustment, loosen two screws C in the looper drive lever, rotate looper drive lever D left or right as required to obtain specified dimension and retighten screws C .

Caution: Pull looper drive lever rocker back tightly when tighten screws C so that the end face of the looper drive lever rocker leans against that of shaft bushing, assuring that clearance between both ends is taken out . (Otherwise it will make noises.)

c. Rotate the machine pulley so that the looper A(Fig. 6) moves from right to left. The looper point should pass close as possible as the back of the needle without contacting, about 0. 08-0. 13mm(Fig. 7) clearance. For adjustment. loosen screw D(Fig 5)in the looper eccentric fork C and turn rocker shaft E on the looper rocker with the looper forward or backward as required. Then retighten screw D.

(1) 弯针调节

a. 首先调节连接杆 A(图 4-1)，使两球轴承中心线间距 X 为 69. 8mm。调节时拧松两个螺母 B，顺旋或倒旋连接杆 A 使问距 X 符合要求后再锁紧螺母。

注意：左面是左旋螺母。

b. 用手顺时针方向旋转皮带轮，使针杆下移到最低点，同时弯针退至最右边位置，此时弯针 A(图 6)的针尖和机针 B 的中心线距离为 8mm。调节时拧松弯针外曲柄的两只螺钉 C，左右摆动弯针外曲柄 D，调节至需要的尺寸后再拧紧螺钉 C。

注意：拧紧螺钉C时，须用手往回拉紧内摇杆：弯针外曲柄端面靠紧轴套端面.达到消除两端面间隙的目的。(否则两端面窜动，会发生噪声）。

c. 继续转动皮带轮，使弯针 A(图 6)从右向左运行。通过机针背面的凹槽时，弯针与机针不得相碰，其间隙为 0. 08mm-0. 13mm(图 7)。调节时拧松弯针小偏心摇杆 C(图 5)的螺钉 D。将弯针作前后摆动，得到合适的间隙后，再拧紧螺 D。

8.Adjusting / 调试（续1）

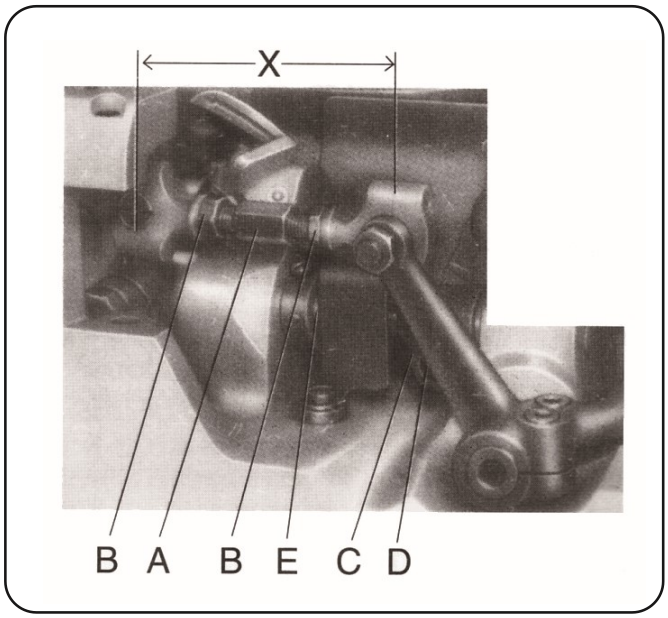

Fig.5

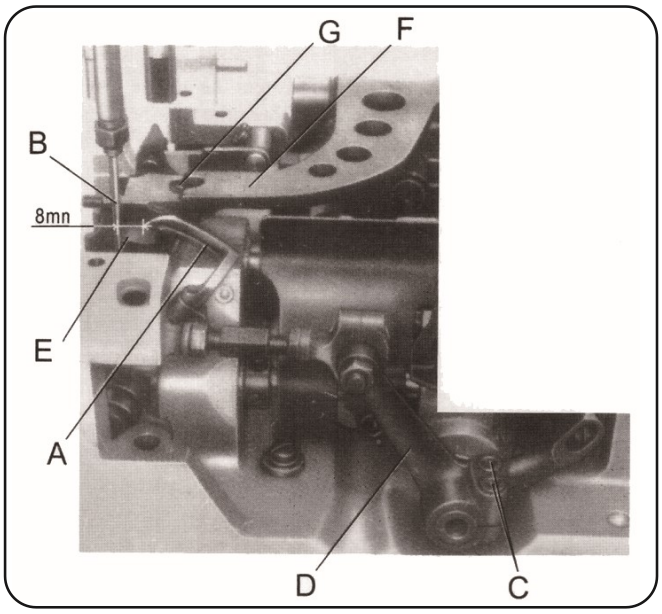

Fig.6

(2) Needle Bar

Remove the throat plate. Rotate the machine pulley in operating direction until the looper moving to the left. When the looper point projects 1~1. 5mm left of the needle. The lower edge of looper and the upper edge of needle eye must be flush in this position(Fig.8) For adjustment, loosen clamp screw B(Fig 4)in the needle bar up or down as required.Retighten screw B and remount throat plate.

(3) Needle Guard

The needle guard E(Fig .9)will protect the needle and prevent it from bending or breaking when the needle goes down The clearance between the needle and the needle guard is 0.08mm-013mm(Fig.9). For adjustment. rotating pulley in the direction of operating, so that the needle guard moves against the needle. Loosen set screw G on feed dog holder (Fig. 6), move the needle guard accordingly. Retighten screw G.

(2)针杆调节

卸下针板，将皮带轮按工作方向转动，使弯针向左边运行，当弯针尖超出机针直径 1~1.5mm 时，机针的针眼上缘须和弯针的底边齐平（图 8）。调整针杆高度时，拧松针杆连轴节螺钉 B（图 4）。上下移动针杆至合适位置后再拧紧螺钉 B，并重新装上针板。

(3)护针块调节

为了避免机针下刺时发生弯曲，护针块E（图9）可起到保护作用。两者的间隙为0. 08mm~0.13mm（图9）。调整时将皮带轮往工作方向转动，使护针块最靠近机针时，拧松牙架F（图6）上的紧定螺钉G，移动护针块E至合适间隙后再拧紧螺钉G。

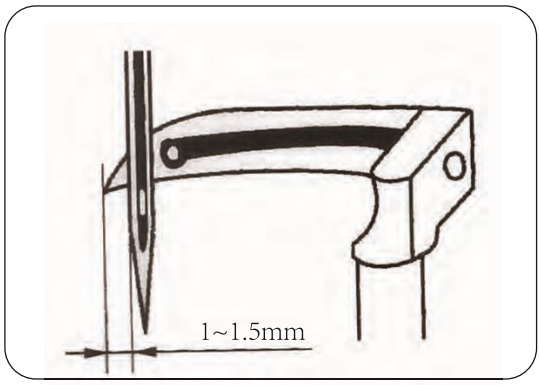

Fig.7

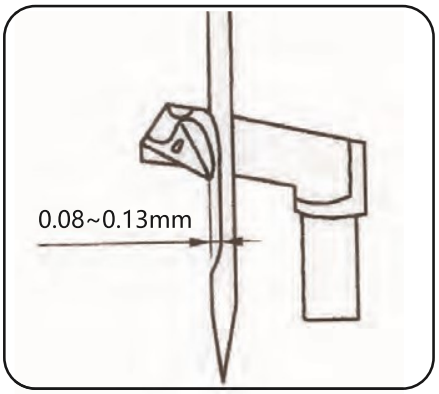

Fig.8

8.Adjusting / 调试（续2）

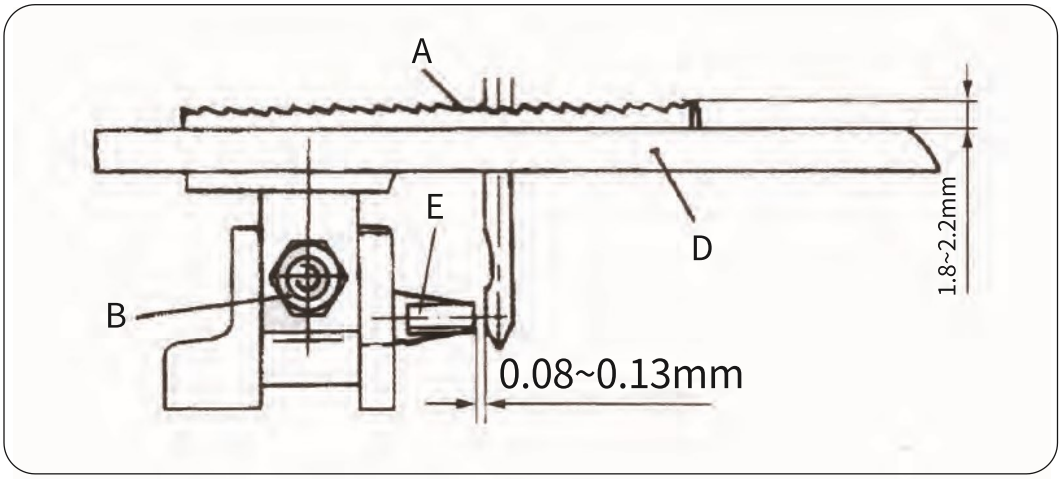

Fig.9

(4) Feed Dog

The height of the feed dog A(Fig 10)is determined by the quality and the thickness of the sewing materials. For closing thin material such as bags made of cloth and plastic, teeth surface should project 1.8mm above the throat plate D top surface, and for sacks about 2.2 mm above the throat plate. For setting, move the feed dog to the highest position,loosen nut B and adjust feed dog by raising or lowering it. Retighten nut B.

If feed dog is not in the centre in the throat plate slots, loosen screws D in the feed rocker C(Fig 10),move the feed rocker right or left as required. Then retighten screws D.

(4)送料牙调节

根据缝料质量与厚度确定送料牙 A(图 10)的高度。对于布袋、塑料编织袋等薄料，齿面应高出针板 D 上平面约 1.8mm，麻袋约 2.2mm，调整时先将送料牙运行至最高点，拧松螺母 B，上下移动送料牙至合适的高度后紧固螺母 B。

送料牙在针板槽内的两侧面间隙不对称时，拧松牙架座 C(图 10)上的两只螺钉 D，左右移动牙架座至要求位置后再拧紧螺钉 D。

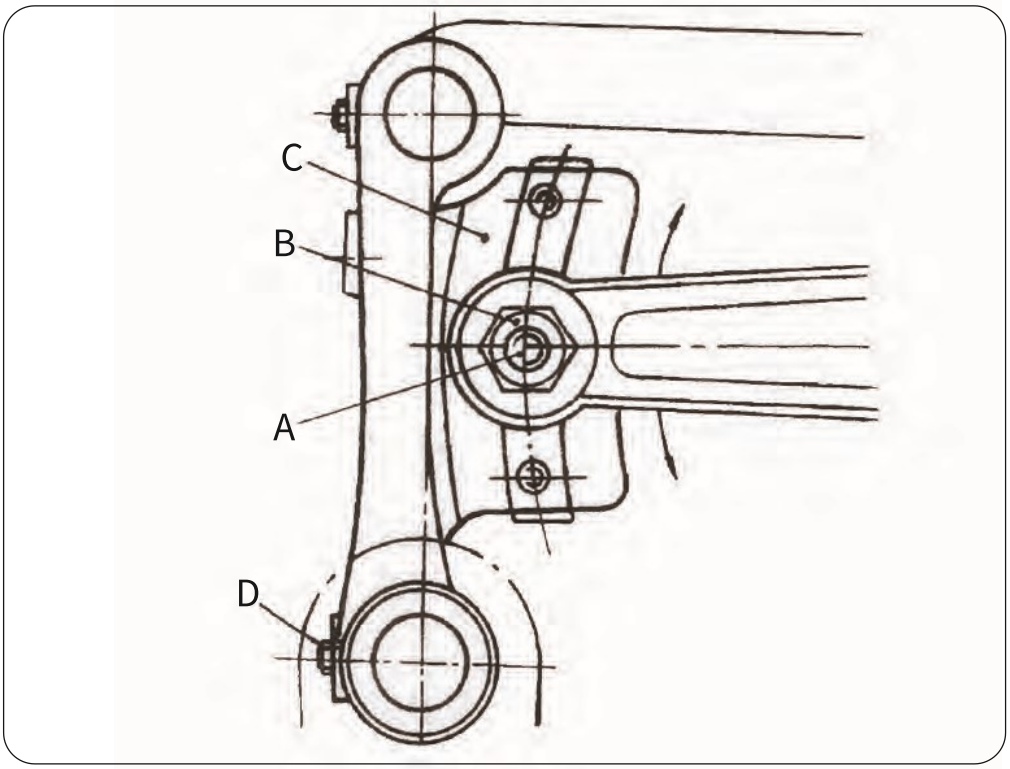

Fig.10

8.Adjusting / 调试（续3）

(5) Stitch Length

The length of the stitch can be adjusted by raising or lowering the stud A in the segment slot of the feed rocker C(Fig 10). Lowering the stud will lengthen the stitch. After loosening nut B, stud A can be moved accordingly. When the desired stitch length is obtained, retighten nut B.

Caution: Any change of stitch length will necessitate a corresponding change of clearance between the needle guard and needle.

(5)针距长度调节

针距长短的调节，是通过牙架座 C(图 10)扇形槽中的针距调节螺钉 A 的上下移动来实现的。下降螺钉 A 使针距加大，升高则缩短针距。调节时拧松螺母 B，上下移动螺钉 A 至合适的针距后再固紧螺母 B。

注意：针距变化将会使护针块和机针间隙发生变化。必须作相应的调整。

(6) Pressure of Presser Foot

The pressure of presser foot is determined by the thickness of the sewing material. When sewing thin materials,decrease pressure; When sewing thick materials, increase pressure. When feed sewing materials smoothly and stitches are uniform, don't increase pressure, to reduce parts wear. For setting pressure, turn the two collars A in to increase pressure, turn out to decrease pressure.

(6)压脚压力调节

压脚压力的大小，取决于缝料的厚度。缝薄料时须减少压力；反之，则增大压力。当缝料推送顺畅，针迹均匀时切勿再增大压力，以缓减机件的磨损。调节压力时旋进两只调压螺套 A(图 11)可增大压力，旋出则减少压力。

(7) Thread Tension

Thread tension is adjusted by thread tension assembly B and C(Fig. 11). Tension of upper thread is generally stronger than that of lower thread. Turn thread tensionB and C in to increase the tension, turn them out to decrease the tension. If the stitch is still not good, should adjust the height of thread adjusting bar D. The height of the thread adjusting bar D is at the same level with the thread eye of the needle bar connection at its highest position.

(7)缝线张力调节

缝钱张力由夹线器 B 与 C(图 11)来调节。通常面线的张力要比底线的张力大。旋进夹钱器 B 与 C 上的螺母使张力增大，旋出则减少。

在调节缝线张力后，线迹仍有紧松现象，应调节线量调节杆 D 的高度。原则上线量调节杆 D 的高度与针杆连轴节 E 升至最高点时的线眼基本呈水平状态。

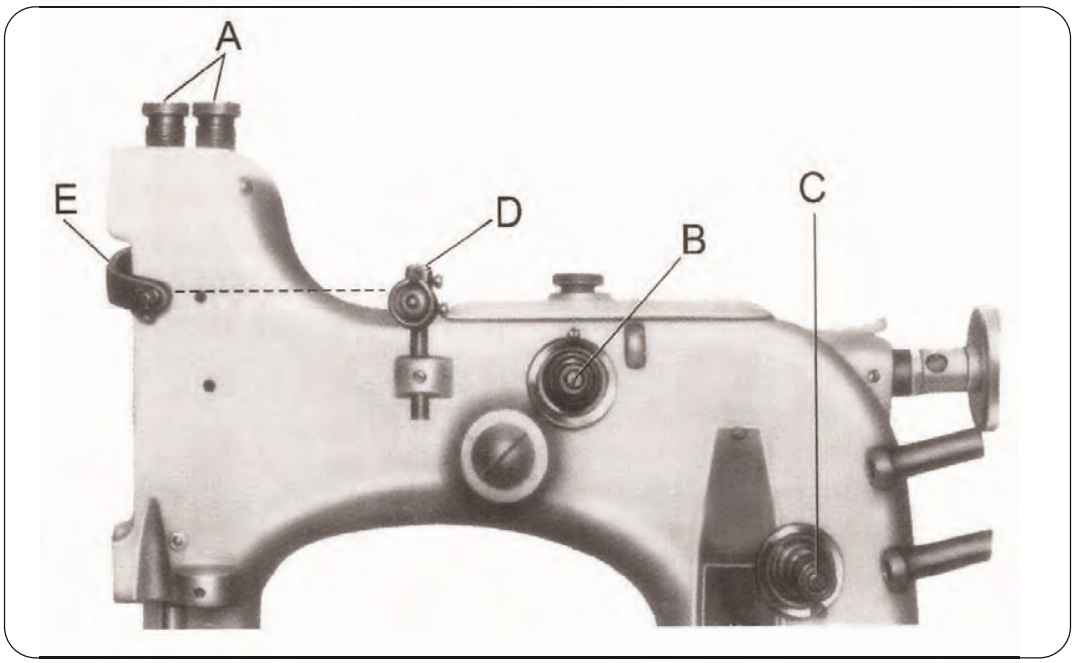

Fig.11

8.Adjusting / 调试(续4)

(8) Mechanism Thread Chain Cutter

Model GK35-2C/GK35-2S/GK35-8 thread chain cutter is driven by mechanism. The knife C(Fig. 12)is positioned in the tapered slot in the front of the base by screw D. The cutting steel B is positioned in the slot of the knife holder by screw A and goes back and forth with the running of the machine. In cutting, the edge of the cutting steel and the knife should overlap by 0.5mm. For adjustment, loosen screw A and D,set as required, retighten screw.

Caution: The tips of the kinfe and cutting steel should be positioned 0.3-0.5mm above the throat plate bottom surface.

The lateral pressure between the knife and the cutting steel is activated by the spring A(Fig. 13). And it is determined y actual requirement in thread chain cutting. For adjustment, loosen the collar C of spring and screw B, increase or decrease the pressure as required, then retighten screw B.

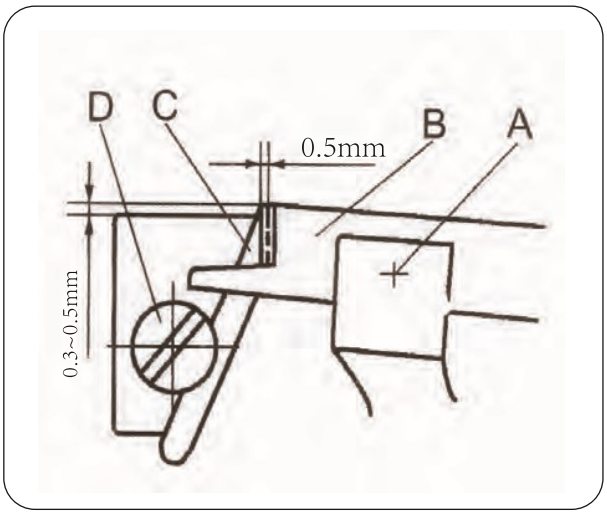

Fig.12

(8)机械式线辫切刀调节

GK35-2C/GK35-2S/GK35-8 型的线辫切刀由机械机构驱动。切刀定片 C(图 12)由螺钉 D 固定在车壳底座前端的斜槽中，切刀动片 B 由螺钉 A 固定在剪刀架槽中随机器运转而往复动作。切割时动片刀刃应超过定片刀刃 0.5mm。调整时拧松螺钉 A 与 D，调节至要求后重新拧紧螺钉。

注意：切刀动片与切刀定片刀尖应高于针板下平面 0.3~ 0.5mm。

切刀动片与切刀定片之间的侧向压力是由弹簧 A(图 13)产生的，其压力大小应根据切割线辫时的实际需要而定。调节时拧松弹簧挡圈 C 上的螺钉 B 进行减少或增大压力调节，调整后重新拧紧螺钉 B。

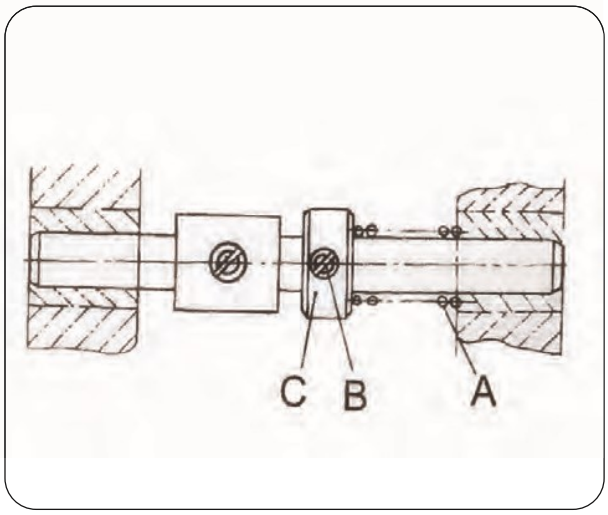

Fig.13

(9) Air cylinder drived cutter

To occlude the upper and lower blades, manually move the upper blade. To do so, put off air source.

a. Here,prior to lowering the upper blade, loosen screw ⓐⓑand ⓗ, and the nuts ⓒ and ⓓ shown in (Fig.13). When both blades are occluded, allow a gap of 0.1 to 0.2mm between the faces of the two blades on the rear side, and tighten the screw ⓐ and the nut ⓓ.The gap adjustment can be easily made placing a sheet of kraft paper between the upper and lower blades, as show in Fig.14.

b. After the setting described in ⓐ above, where the screw h is in light contract with the screw ⓔ, tighten the nut ⓓ.

(9)气动式线辫切刀调节

在调节切刀之前，必须切断气源，先确认供气系统停止后，再开始调整工作。每次调换新切刀(上或下刀片)时，都必须进行调整。

a. 用手移动上刀片(106053)，当上下刀啮合时，其刀片后侧配合间隙为 0.1~0.2mm(在上刀和下刀之间应当可以顺畅的插入或抽出一张牛皮纸)，如果需要下降上刀片，放松螺钉ⓐⓑ和ⓗ，还要放松螺母ⓒ和ⓓ，如图 14 所示，调整好上下刀之间的间隙后，拧紧螺丝ⓐ和螺母ⓓ。

b. 按照以上ⓐ调整后，将螺钉ⓗ拧到和螺钉轻轻接触时，拧紧螺母ⓓ。

8.Adjusting / 调试（续5）

c. After the adjustment by steps ⓐ and ⓑ , cut a crepe tape or thread for test.

* If the front end of the cutter cuts but the rear end does not, there is gap on the rear side. In this case. loosen the nut ⓓ and loosen the screw ⓗ by 1/8 turn, and cut the thread again for test. If it still does not cut, loosen the screw ⓗ by another 1/8 turn and repeat this adjustment and test cut until the thread can be cut, and then retighten the nut ⓓ.
* If the rear end of cutter cuts but the front end does not cut, the adjustment by step a is insufficient. Then make re-adjustment of the rear side so that the gap between both the blades become 0.1 to 0.2mm.
* If the lower blade tends to turn away without cutting, loosen the nut ⓕ and increase the pressure of the spring by turning the screw ⓖ clockwise (Fig.14) .

d. Adjust the overlapped depth of the upper and lower blades by changing the length of air cylinder rod end so that the distance between the upper face of the lower blade and the rear side of the upper blade becomes 2mm, as shown in(Fig.15).

c. 按照以上步骤ⓐ和ⓑ调整结束后，试切一下皱纹纸或者缝线。

* 如果切刀前端能切，后端不能切，这是因为后端的间隙太大。这时需要松开螺母ⓓ，并将螺钉ⓗ旋出 1/8 圈，再试切一下皱纹纸或者缝线。如果仍然不能缺，继续将螺钉ⓗ旋出 1/8 圈，再试切，如此反复知道能切断为止，然后拧紧螺母ⓓ。

* 如果切刀后端能切，前端不能切，说明步骤 a 调整的不到位。再一次调整螺钉ⓑ，使上、下切刀的间隙为 0.1~0.2mm。

* 如果试切皱纹纸或者缝线过程中，如果存在下刀让刀的情况，请放松螺母ⓕ，通过顺时针方向转动螺钉ⓖ增大弹簧压力，如图 14 所示。

d. 当上、下切刀全部啮合时，其深度应该为 2mm，如图 15 所示。通过适当改变气缸杆端长度，将上、下刀的啮合深度调整为 2mm。

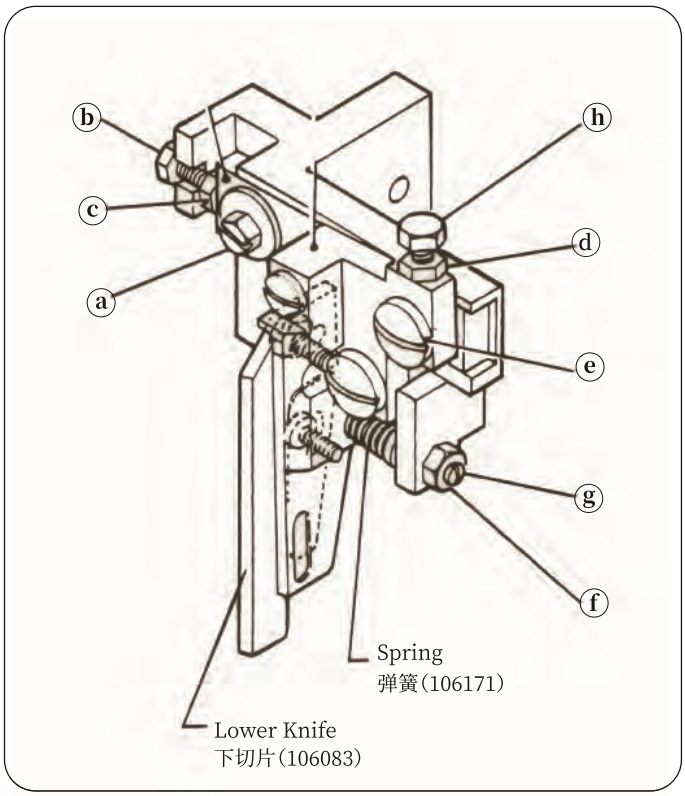

Fig.14

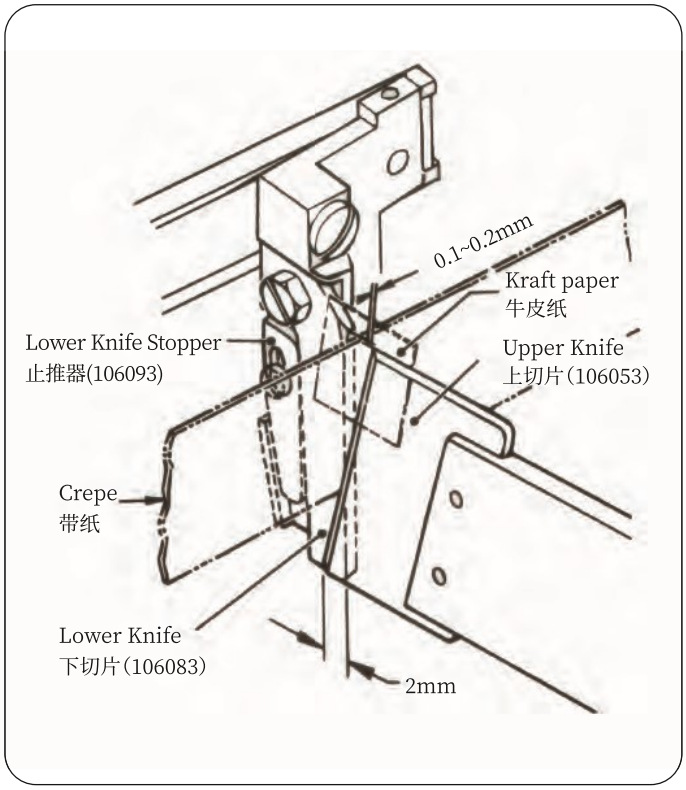

Fig.15

9.Troubleshooting

Problem	Cause	Solution	Ref
Thread Breaks	1. Improper thread 2. Thread jamming 3. Thread tension is too tight 4. Uneven thread, not strong enough 5. There are burrs on needle eye, throat plate hole and looper 6. Motion of needle and looper is not timed each other 7. Needle strikes needle guard or looper 8. Feed dog teeth are too sharp 9. Excessive presser foot pressure 10. Position of looper thread take-up piece is too high, releasing of lower thread is too slow.	Rethread Check and resolve Release thread tension Select good quality thread Grind or replace Adjust as required Adjust as required Wear teeth dull Decrease pressure Lower looper thread take-up piece fasten lower thread releasing	6 8-(7) 8-(7) 6 8-(1) 8-(1)/(3) 8-6
Skipping	1. Incorrect setting of needle 2. Motion of needle and looper is not timed each other 3. Position of needle is too high or needle is bent 4. Position of looper thread take-up piece is too low, releasing of lower thread is too fast 5. Thin needle, rough thread.	Adjust needle Adjust as required Adjust the height of needle or replace Raise the position of thread take-up piece delay lower thread releases Replace needle or thread	7 8-(1) 8-(2) 6
Needle Breaks	1. Needle bent 2. Needle rikes looper or needle guard hard 3. Conveyor speed is faster than sewing speed 4. Thin Needle closing thick sewing materials	Replace needle Adjust the play Adjust conveyor or sewing speed Replace needle	8-(1)
Needle Thread Tension Uneven	1. Insufficient needle thread or excessive Looper thread 2. Improper needle thread tension pressure	Adjust height of thread adjusting bar Adjust thread tension pressure	8-(7) 8-(7)
Needle Thread Tension Uneven	1. Insufficient Looper thread or excessive Looper thread 2. Improper needle thread tension pressure	Adjust position of looper thread take-up Adjust thread tension pressure	8-(7)
Feeding Material Stagnant	1. The surface of feed dog is too low or wear out 2. Presser foot pressure is too small 3. Screw of feeding cam is loose	Raise feed dog or replace Increase pressure Tighten screw	8-(6)
Upper and Lower material not in a level	1. Presser foot pressure is too small 2. Presser foot surface is not smooth,friction is too large	Adjust to increase pressure Polish presser foot	8-(6)
Machine Runs Hard	1. The machine assembled bad 2. Pulley is too tight 3. Moving parts lack of oil	Check assembling clearance and adjust Release pulley Cleaning and oiling	
Large Noises	1. 1.Driving parts are vulnerable,lead to clearance increasing 2. Set screw is loose,lead to parts striking each other 3. Oil connections are not smooth,lack of oil	Replace parts Tighten screws Cleaning and oiling	5

9.机器故障原因及解决方法

故障内容	原因	解决方法	参考
断线	1. 线路穿错 2. 线源轧住 3. 缝线张力太紧，出现量不足 4. 缝线粗细不均，拉力强度不够 5. 机针孔、针板孔或弯针孔有毛刺 6. 机针与弯针运动位置配合不好 7. 机针与弯针块或弯针相碰 8. 送料牙齿太锐 9. 压脚压力过大 10. 弯针挑线动片位置过高，底线释放过慢	正确穿线 检查排除 放松夹线板压力 选择质量合格的缝线 用细纱布砂光或调整 重新调整 重新调整 磨钝齿尖 放松压脚压力 降低位置，加快底线释放时间	6 8-(7) 8-(7) 6 * 8-(1) 8-(1)/(3) * 8-6 *
跳针	1. 机针凹形面装反或装斜 2. 机针与弯针运动不协调 3. 机针太高使弯针钩不到线或机针弯曲 4. 弯针挑线动片位置过低，过早释放底线 5. 机针细，而缝线粗，配合不当	调整机针方向 重新调整 调整机针高度或换新针 调高位置，延迟底线释放 调换机针或缝线，使之匹配	7 8-(1) 8-(2) * 6
断机针	1. 机针弯曲 2. 机针与弯针相碰或与护针块相碰严重 3. 输送带速度快于缝纫速度 4. 细针缝厚料	调换新针 调整各针之间间隙 调整输送带速度或调整缝纫速度 换粗针	* 8-(1) * *
机针线紧松不匀	1. 针线线量不足或过多 2. 机针夹线板压力过大或过小	调节线量调节杆高度 调整夹线板压力	8-(7) 8-(7)
弯针线紧松不匀	1. 弯针线出线量不足或过多 2. 机针夹线板压力过大或过小	调整弯针挑线动片高低位置 调整夹线板压力	* 8-(7)
送料呆滞	1. 送料牙齿面过低或齿面磨损 2. 压脚压力过小 3. 送料凸轮紧定螺钉松脱	抬高齿面或调换送料牙 增加压脚压力 拧紧螺钉	* 8-(6) *
上下层缝料不齐	1. 压脚压力太小 2. 压脚地面不光滑	调节调压螺套，增加压脚压力 抛光压脚底面	8-(6) *
运动沉重	1. 机器装配不良 2. 传动皮带过紧 3. 运动部位缺油	检查装配间隙，进行调整 适当放松皮带 清除污物后注入润滑油	* * *
运动沉重	1. 机器装配不良 2. 传动皮带过紧 3. 运动部位缺油	调换新的零件 拧紧各部位螺钉 清除油路内的尘埃，注入清洁润滑油	* * 5

ORDERING PARTS

1. Desciption of each part and its stamp number is described in this parts list. Screws and nuts foor parts are shown adjacent to the relevant parts. Whenn ordering parts. descrlibe clearly stamp number with its name of parts.
2. The parts which have no Ref. Number can not be delivcred independently;always order it as an assembly.
3. A set of assembled parts is represented by the stamp number of its main parts.

* The parts list is subject to change without prior notice.

订货零部件时的注意事项

1. 零件列表中列出来每一个零件的名称与零件号。装配部件的螺钉和螺母与其他连接的相应零部件一起表示，订货时请写清零部件号与零部件名称。
2. 没有相应序号的零部件不能单独购买，必须订购整个部件。
3. 装配好的部件用其主要部件表示。

* 该零件列表若有改动恕不通知。

CONTENTS 目录

01 MACHINE BODY AND BUSHING PARTS
机体与轴套部件

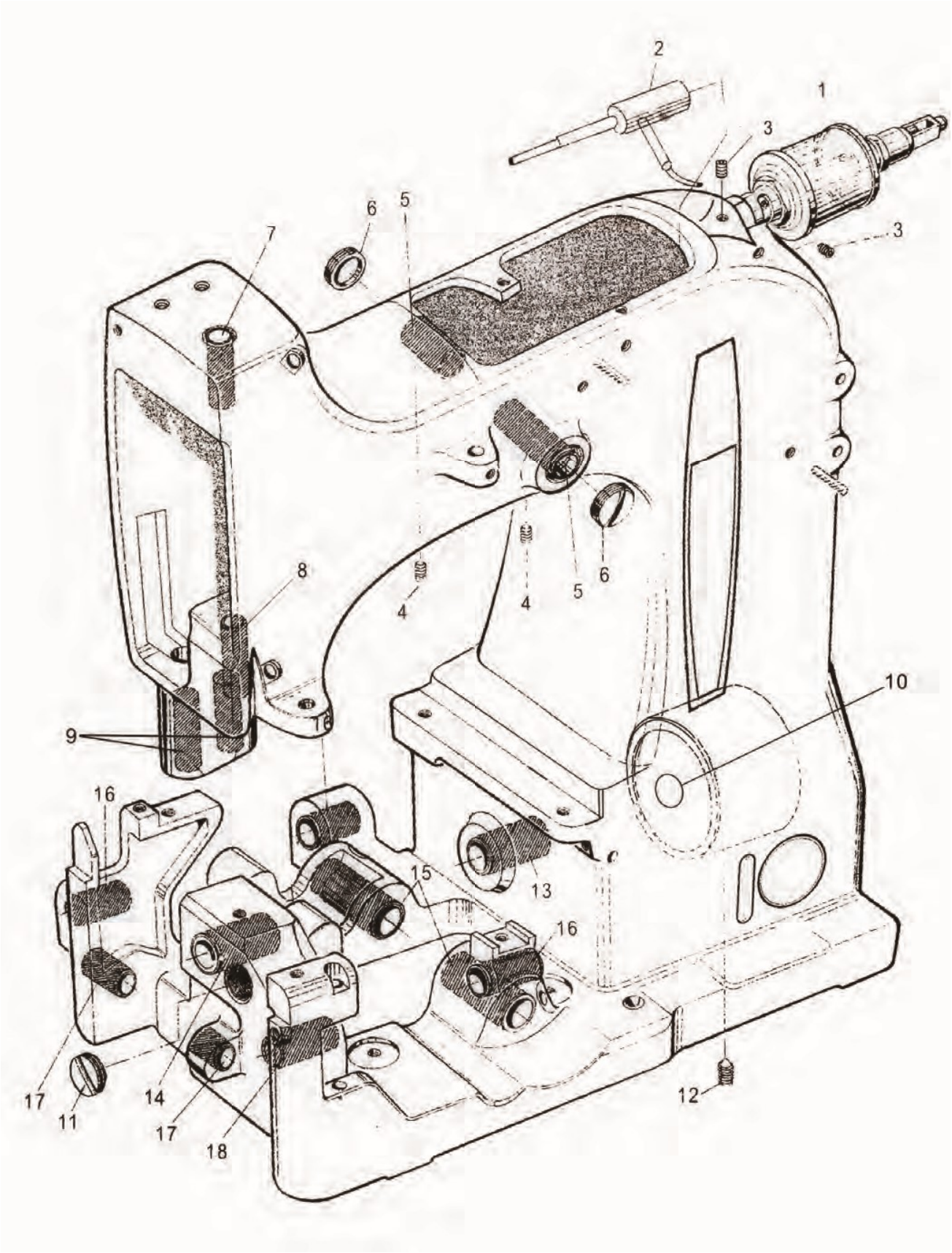

01 MACHINE BODY AND BUSHING PARTS
机体与轴套部件

序号 Ref. No.	零部件件号 Part Number	零部件名称 Description		数量Q' ty						
				-2C	-2S	-6A	-6AS	-7	-8	-8A
1	1001	Sight Feed Oiler	滴注式油杯	1	1	1	1	1	1	1
2	3501001	Oil Cup Base	油杯座	1	1	1	1	1	1	1
3	403	Screw	平端螺钉M5X6	2	2	2	2	2	2	2
4	110	Screw	平端螺钉M5X12	2	2	2	2	2	2	2
5	3501002	Bushing for Needle Lever Shaft	针杆杠杆轴套	2	2	2	2	2	2	2
6	3501003	Plug Screw	杠杆轴闷头	2	2	2	2	2	2	2
7	3501004	Needle Bar Bushing, upper	针杆上轴套	1	1	1	1	1	1	1
8	3501005	Needle Bar Bushing, lower	针杆下轴套	1	1	1	1	1	1	1
9	3501006	Presser Bar Bushing	压脚杆下轴套	2	2	2	2	2	2	2
10	3501009	Crank Shaft Bearing Housing	主轴后套	1	1	1	1	1	1	1
11	3501010	Plug Screw	螺塞	1	1	1	1	1	1	1
12	509	Screw	锥端螺钉8×25	1	1	1	1	1	1	1
13	3501011	Crank Shaft Bushing	主轴中套	1	1	1	1	1	1	1
14	3501011a	Crank Shaft Bushing	主轴前套	1	1	1	1	1	1	1
15	3501013	Looper Drive lever Shaft Bushing	弯针轴轴套	2	2	2	2	2	2	2
16	3501012	Feed Rocker Shaft Bushing	送料轴轴套	3	3	3	3	3	3	3
17	3501015	Knife Lever Shaft Bushing	剪刀轴轴套	2	2	–	–	–	2	–
18	3501016	Looper Shaft Bushing, front	弯针架轴前套	1	1	1	1	1	1	1

02 MISCELLANEOUS COVER PARTS

罩壳部件

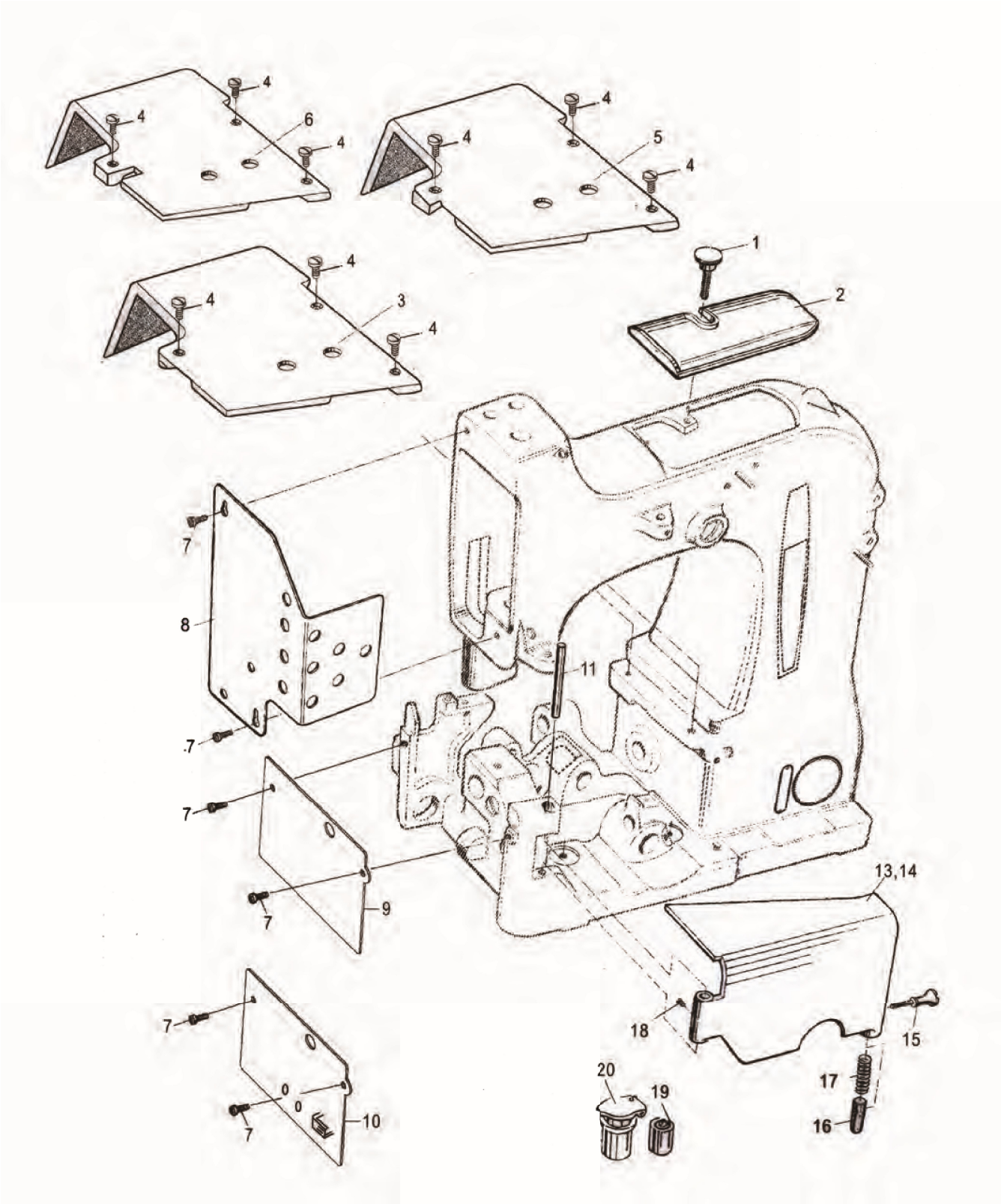

02 MISCELLANEOUS COVER PARTS
罩壳部件

序号 Ref. No.	零部件件号 Part Number	零部件名称 Description		数量Q' ty						
				-2C	-2S	-6A	-6AS	-7	-8	-8A
1	3502017	Screw	盖板捏手	1	1	1	1	1	1	1
2	3502018	Arm Cover	上盖板	1	1	1	1	1	1	1
3	3502019	Cloth Plate	罩壳	1	–	–	–	–	–	–
4	111	Screw	圆柱头螺钉M5×15	3	3	3	3	3	3	3
5	3502019A	Cloth Plate	罩壳	–	–	1	–	–	1	1
6	3502019B	Cloth Plate	罩壳	–	–	–	–	1	–	–
	3502019S	Cloth Plate	罩壳	–	1	–	1	–	–	–
7	109	Screw	圆柱头螺钉M5×8	4	4	4	4	4	4	4
8	3502021	Face Cover	面板	1	1	1	1	1	1	1
9	3502022	End Cover	前盖板	1	1	–	–	–	1	–
	3502022A	End Cover	前盖板	–	–	1	1	–	–	1
	3502022B	End Cover	前盖板	–	–	–	–	1	–	–
11	3502024	Hinge Pin	铰链销	1	1	1	1	1	1	1
13	3502026	Hinge Cover	摇门	1	–	–	–	1	–	–
14	3502026A	Hinge Cover	摇门	–	–	1	–	–	1	1
	3502026S	Hinge Cover	摇门	–	1	–	1	–	–	–
15	3502027	Locking Bolt Knob	捏手	1	1	1	1	1	1	1
16	3502028	Locking Bolt	插销	1	1	1	1	1	1	1
17	3502029	Spring	弹簧	1	1	1	1	1	1	1
18	403	Screw	平端螺钉M5×6	1	1	1	1	1	1	1
19	1001-1	Pinball Oil Cup	弹子油杯Φ6	6	6	6	6	6	6	6
20	1001-3	Spring Cover Oil Cup	弹簧盖油杯	4	4	4	4	4	4	4

03 THREAD GUIDE & THREAD TENSION PARTS
过线与线张紧部件

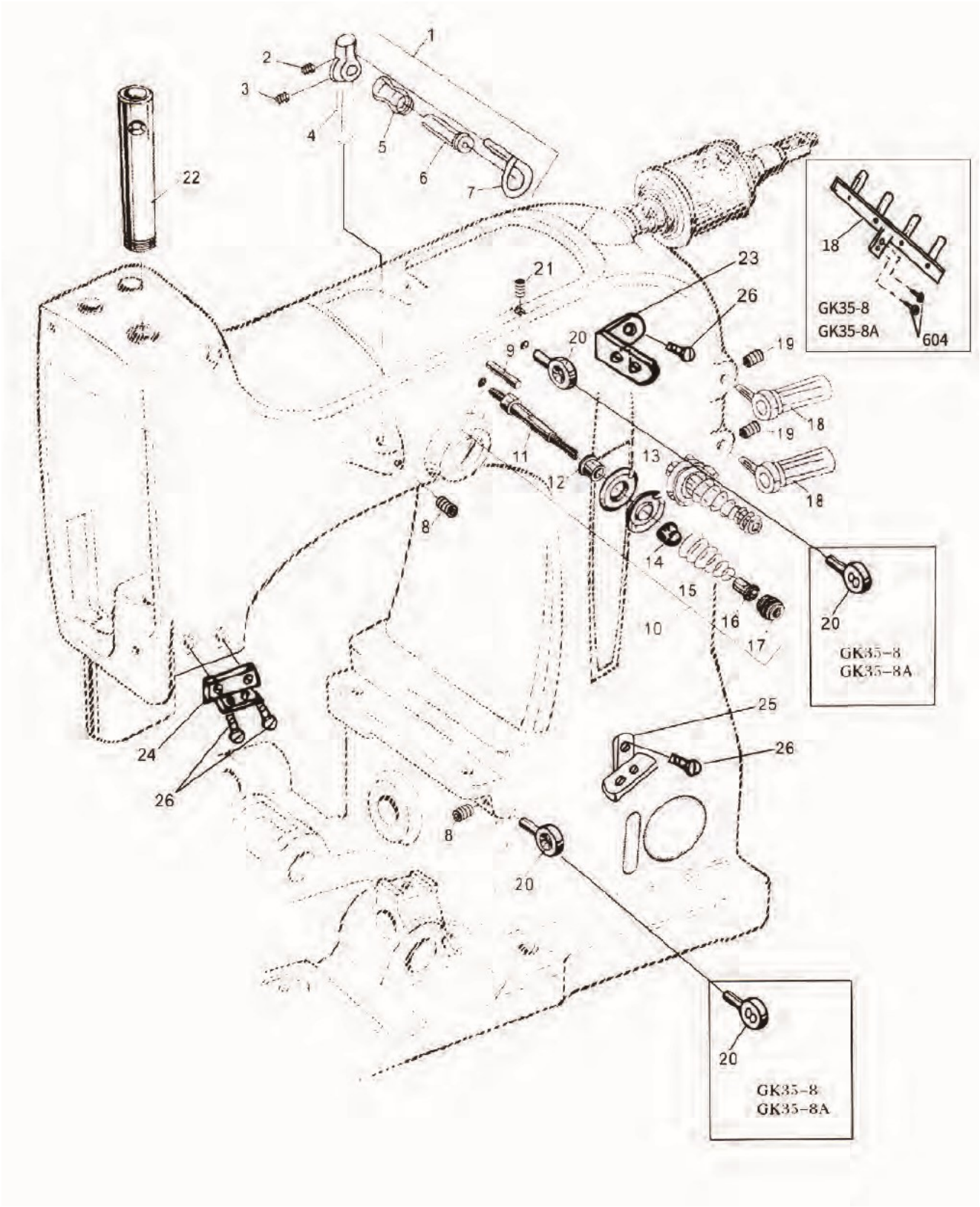

03 THREAD GUIDE & THREAD TENSION PARTS
过线与线张紧部件

序号 Ref. No.	零部件件号 Part Number	零部件名称 Description		数量Q' ty						
				-2C	-6A	-2S	-6AS	-7	-8	-8A
1	350301	Needle Thread Guide Ass' y	线量调节杆总成	1		1		1	1	
2	101	Screw	圆柱头螺钉M3×6	1		1		1	1	
3	401	Screw	平端螺钉M4×4	1		1		1	1	
4	3503030	Needle Thread Guide	线量调节杆	1		1		1	1	
5	3503031	Tread take-up Roller	过线滚轮	1		1		1	1	
6	3503032	Oil Cup	压注油杯	1		1		1	1	
7	3503033	Thread Guide Finger	拉线架	1		1		1	1	
8	404	Screw	平端螺钉M5×8	2		2		2	4	
9	3503034	Pin	销	2		2		2	4	
10	350302	Thread Tension Ass' y	夹线器组件	2		2		2	4	
11	3503035	Tension Post	夹线螺柱	2		2		2	4	
12	3503036	Tension Post Ferrule	夹线板滚柱	2		2		2	4	
13	3503037	Tension Disc	夹线板	4		4		4	8	
14	3503042	Tension Sleeve	压簧套	2		2		2	4	
15	3503038	Spring	压簧	2		2		2	4	
16	3503039	Tension Spring Ferrule	压簧压套	2		2		2	4	
17	3503040	Tension Nut	调节螺母	2		2		2	4	
18	350303J	Thread Guide Ass' y	导线柱组件	2		2		2	–	
	358303J	Thread Guide Ass' y	导线柱组件	–		–		–	1	
19	403	Screw	平端螺钉M5×6	2		2		2	4	
20	3503043	Thread Guide	过线柱	2		2		2	2	
	358001	Thread Guide	过线柱	–		–		–	2	
21	402	Screw	平端螺钉M5×4	1		1		1	1	
22	3503044	Needle Bar Guide	针杆护套	1		1		1	1	
23	358002J	Thread Guide	过线1	–		–		–	1	
24	358003J	Thread Guide	过线2	–		–		–	1	
25	358004J	Thread Guide	过线3	–		–		–	1	
26	110	Screw	圆柱头螺钉M5×12	–		–		–	4	

04 CRANK SHAFT PARTS
主轴驱动部件

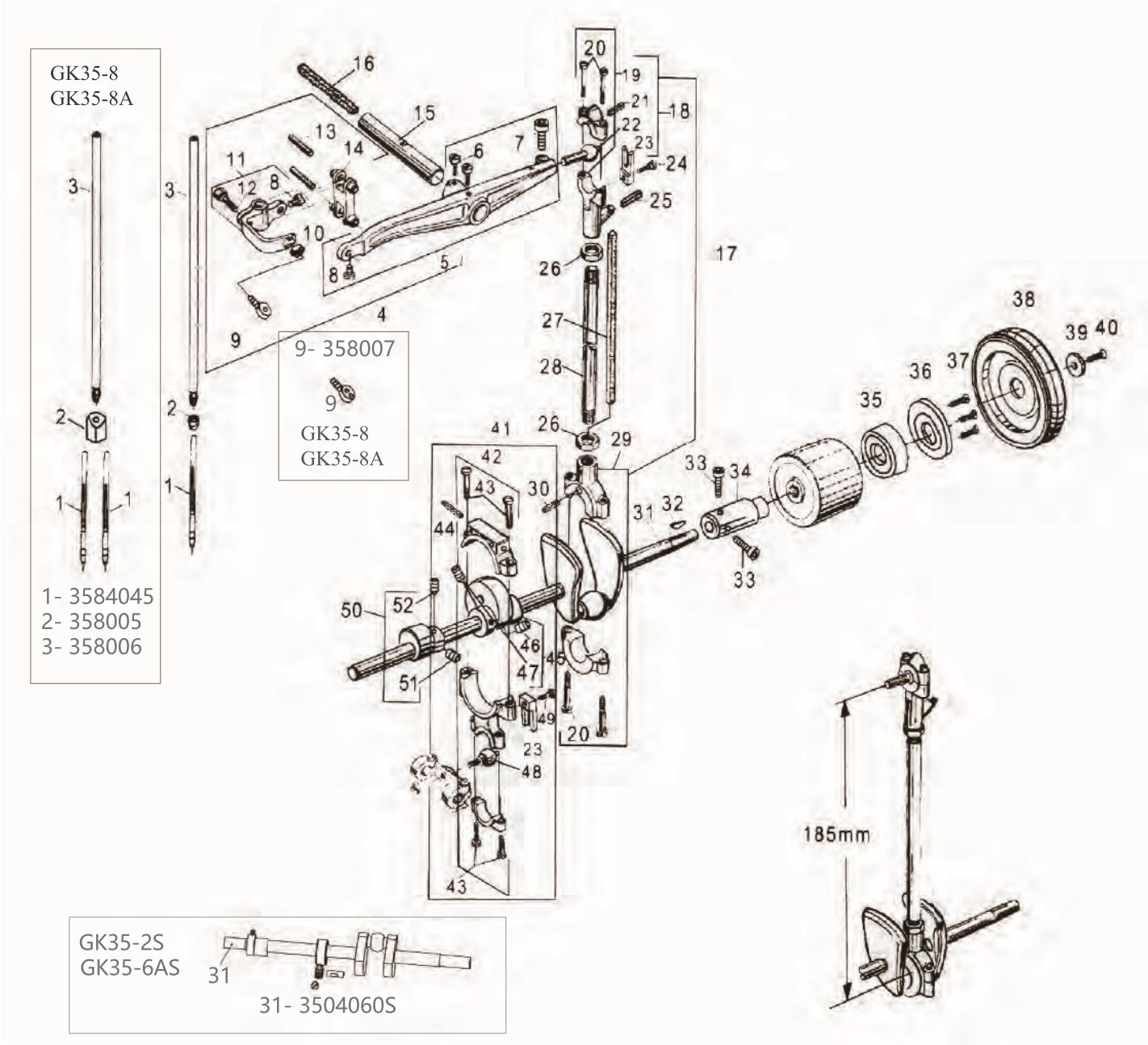

04 CRANK SHAFT PARTS
主轴驱动部件

序号 Ref. No.	零部件件号 Part Number	零部件名称 Description		数量Q' ty						
				-2C	-6A	-2S	-6AS	-7	-8	-8A
1	3504045	Needle	机针	1		1		1	1	
2	3504046(-8J)	Needle Clamp Nut	针杆螺母	1		1		1	1	
3	3504047(-8J)	Needle Bar	针杆	1		1		1	1	
4	350404	Needle Lever Ass' y	针杆联轴节组件	1		1		1	1	
5	3504048	Needle Lever	针杆杠杆	1		1		1	1	
6	110	Screw	圆柱头螺钉M5×12	2		2		2	2	
7	604	Screw	内六角螺钉M6×16	1		1		1	1	
8	102	Screw	圆柱头螺钉M4×6	2		2		2	2	
9	3504049	Thread Guide	过线柱	1		1		1	1	
10	701	Nut	螺母M5	1		1		1	1	
11	3504050	Needle Bar Connection	针杆联轴节	1		1		1	1	
12	3510192	Coupling Bolt	联轴节螺栓	1		1		1	1	
13	3504051	Needle Bar Link Pin	针杆小连杆销	2		2		2	2	
14	3504052	Connection Link	针杆小连杆	1		1		1	1	
15	3504053	Needle Lever Shaft	针杆杠杆轴	1		1		1	1	
16	1004-5	Oil Wick	油绳	1		1		1	1	
17	350405	Needle Lever Ass' y	上下连杆组件	1		1		1	1	
18	350406	Needle Lever Ball Link Ass' y	连杆上接头组件	1		1		1	1	
19	3504054	Shell	连杆上接头	1		1		1	1	
20	3504055	Screw	轴位螺钉	4		4		4	4	
21	1004-9	Oil Wick	油绳	1		1		1	1	
22	3504056	Ball Stud	上接头球头销	1		1		1	1	
23	3504057	Guide Fork	导向板	2		2		2	2	
24	3510193	Guide Plate Bolt	导向板螺栓	1		1		1	1	
25	1004-8	Oil Wick	油绳	1		1		1	1	
26	708	Nut	螺母M10×1	2		2		2	2	
27	1004-1	Oil Wick	油绳	1		1		1	1	
28	3504058	Needle Lever Connection Rod	连杆接杆	1		1		1	1	
29	3504059	Shell	连杆下接头	1		1		1	1	
30	1004-7	Oil Wick	油绳	1		1		1	1	
31	3504060(S)	Crank Shaft	曲轴	1		1		1	1	
32	3504061	Woodruff Key	半圆键	1		1		1	1	
33	601	Screw	内六角螺钉M5×12	2		2		2	2	
34	3504062	Bearing Bushing	轴承衬套	1		1		1	1	
35	1005	Bearing	轴承6205	1		1		1	1	
36	3504063	Bearing Cap	轴承压盖	1		1		1	1	
37	201	Screw	沉头螺钉M4×10	3		3		3	3	
38	3504064	Pulley	带轮	1		1		1	1	
39	3504065	Washer	垫圈	1		1		1	1	
40	602	Screw	内六角螺钉M5×14	1		1		1	1	
41	350407	Looper Drive Eccentric Ass' y	弯针大连杆组件	1		1		1	1	
42	3504066	Looper Connection Bar	弯针大连杆	1		1		1	1	
43	3504067	Screw	轴位螺钉	4		4		4	4	
44	1004-6	Oil Wick	油绳	1		1		1	1	
45	3504068	Looper Eccentric	弯针大偏心	1		1		1	1	
46	406	Screw	内六角平端螺钉M6×8	1		1		1	1	
47	503	Screw	内六角锥端螺钉M6×10	1		1		1	1	
48	3504070	Ball Sutd	大连杆球轴承	1		1		1	1	
49	3510193	Guide Plate Bolt	导向板螺栓	1		1		1	1	
50	3504071	Looper Avoid Eccentric	弯针小偏心	1		1		1	1	
51	405	Screw	内六角平端螺钉M6×4.5	1		1		1	1	
52	502	Screw	内六角锥端螺钉M6×6.5	1		1		1	1	
53	410	Screw	内六角平端螺钉M6×10	-		-		-	2	
54	403	Screw	内六角平端螺钉M5×6	-		-		-	1	

注：-8J, GK35-8/8A不通用；S, GK35-2S/GK35-6AS不通用。图号见零件图。

05 LOOPER DRIVE PARTS

弯针驱动部件

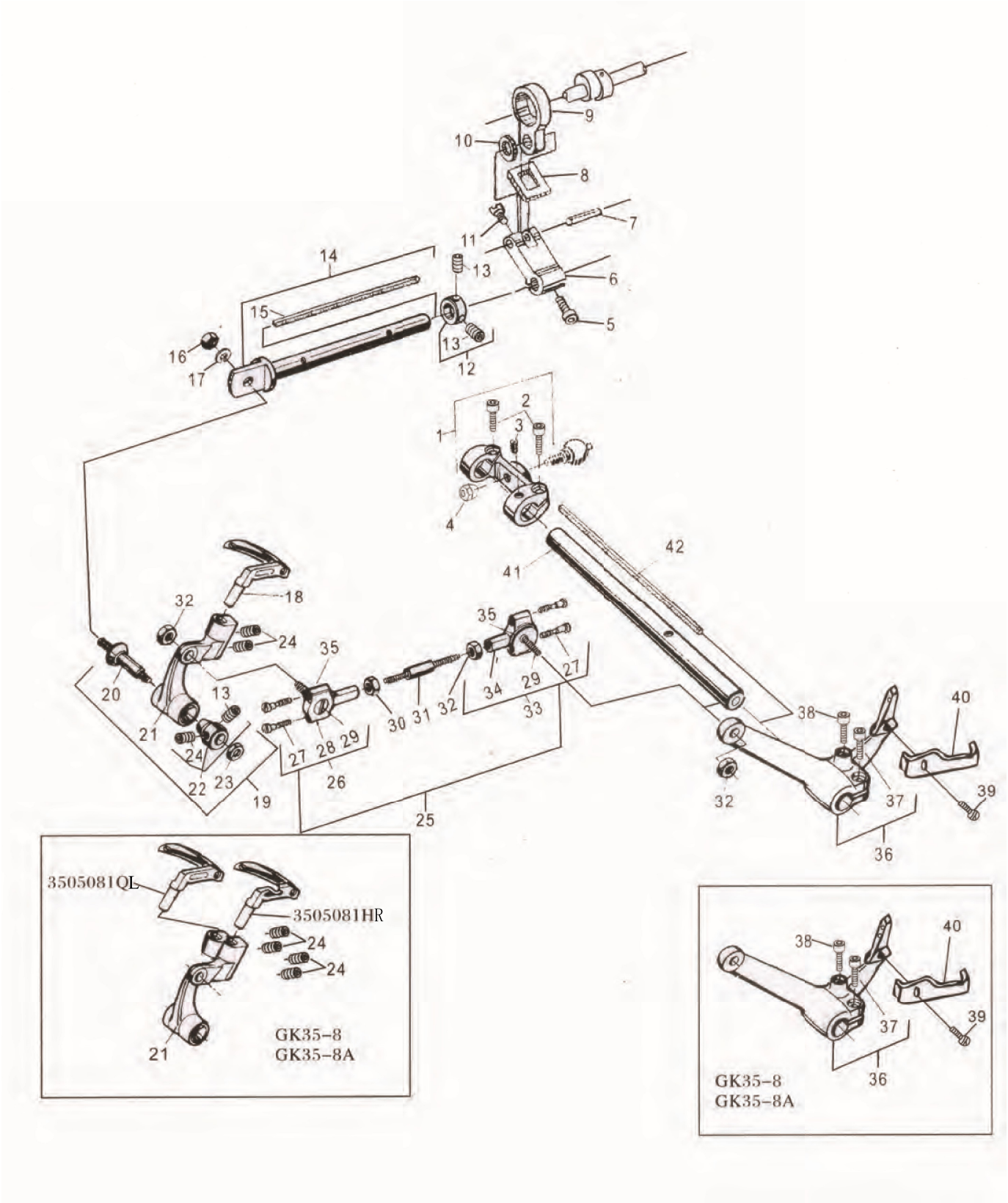

05 LOOPER DRIVE PARTS
弯针驱动部件

序号 Ref. No.	零部件件号 Part Number	零部件名称 Description		数量Q' ty						
				-2C	-6A	-2S	-6AS	-7	-8	-8A
1	3505072	Rocker for Looper Drive Shaft	内摇杆	1		1		1	1	
2	602	Screw	内六角螺钉M5×14	2		2		2	2	
3	501	Screw	锥端螺钉M5×6	1		1		1	1	
4	3505073	Nut	锥螺母	1		1		1	1	
5	604	Screw	内六角螺钉M6×16	1		1		1	1	
6	3505074	Rocker for Looper Avoid Eccentric	弯针小偏心摇杆	1		1		1	1	
7	3505075	Connecting Rod Pin	连杆销	1		1		1	1	
8	3505076	Felt	毛毡	1		1		1	1	
9	3505077	Connecting Bar	弯针小偏心连杆	1		1		1	1	
10	3505078	Felt Washer	毛毡垫圈	1		1		1	1	
11	101	Screw	圆柱头螺钉M3×6	1		1		1	1	
12	3505079	Collar	挡圈	1		1		1	1	
13	402	Screw	平端螺钉M5×4	3		3		3	3	
14	3505080	Looper Rocker Shaft	弯针架轴	1		1		1	1	
15	1004-4	Oil Wick	油绳	1		1		1	1	
16	707	Nut	螺母M8×1	1		1		1	1	
17	904	Spring Washer	弹簧垫圈8	1		1		1	1	
18	3505081	Looper for Two-thread	弯针	1		1		1	-	
	3505081QL	Looper for four-thread	四线弯针	-		-		-	1	
	3505081HR	Looper for four-thread	四线弯针	-		-		-	1	
19	350508	Looper Rocker Ass' y	弯针架组件	1		1		1	-	
	350508J	Looper Rocker Ass' y	弯针架组件	-		-		-	1	
20	3505082	Cone Stud for Looper Rocker	弯针架锥轴	1		1		1	1	
21	3505083	Looper Rocker	弯针架	1		1		1	-	
	3505083Q	Looper Rocker	弯针架	-		-		-	1	
22	3505084	Cone	锥形支撑体	1		1		1	1	
23	704	Nut	螺母M6×0.75×3	1		1		1	1	
24	402	Set Screw	平端螺钉M5×4	3		3		3	5	
25	350509	Ball Joint Ass' y	小连杆组件	1		1		1	1	
26	350510	Ball Joint Ass' y, left	左小连杆组件	1		1		1	1	
27	3505085	Screw	轴位螺钉	4		4		4	4	
28	3505086	Shell	左弯针小连杆	1		1		1	1	
29	3505087	Ball Stud	球接头	2		2		2	2	
30	703	Nut(left)	螺母BM6（左）	1		1		1	1	
31	3505088	Connecting Rod	小连杆接杆	1		1		1	1	
32	702	Nut	螺母BM6	3		3		3	3	
33	350511	Ball Joint Ass' y, right	右小连杆组件	1		1		1	1	
34	3505089	Shell	右弯针小连杆	1		1		1	1	
35	3505090	Felt Washer	毛毡垫圈	2		2		2	2	
36	3505092	Looper Drive Lever	弯针外曲柄	1		1		1	-	
	3585092J	Looper Drive Lever	弯针外曲柄	-		-		-	1	
37	601	Screw	内六角螺钉M5×12	1		1		1	1	
38	603	Screw	内六角螺钉M5×16	1		1		1	1	
39	104	Screw	圆柱头螺钉M4×12	1		1		1	1	
40	3505093	Looper Thread take-up	弯针挑线	1		1		1	1	
	358009J	Looper Thread take-up	弯针挑线	-		-		-	1	
41	3505094	Looper Drive Lever Rocker Shaft	弯针轴	1		1		1	1	
42	1004-2	Oil Wick	油绳	1		1		1	1	

06 FEED DRIVE PARTS
送料驱动部件

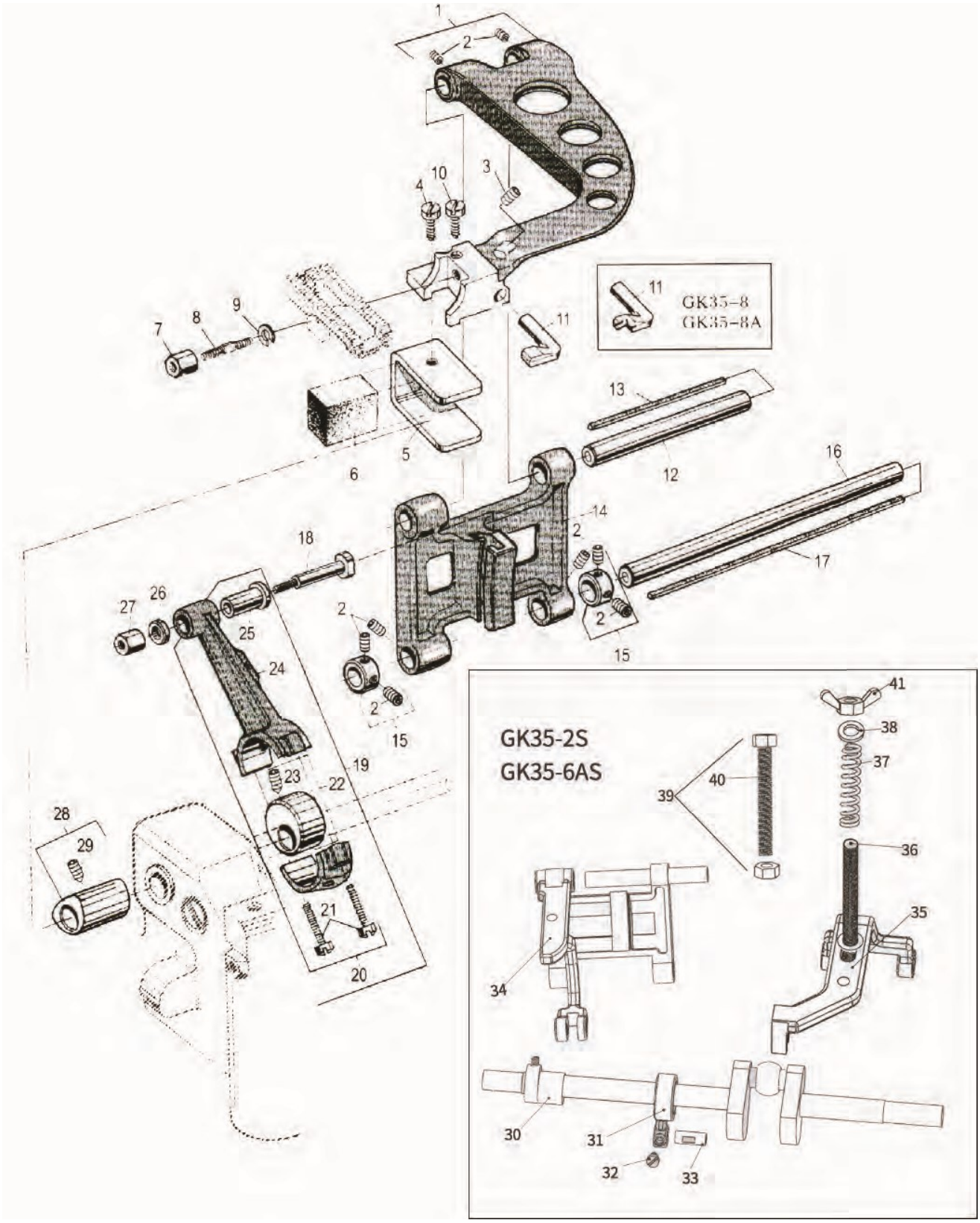

06 FEED DRIVE PARTS
送料驱动部件

序号 Ref. No.	零部件件号 Part Number	零部件名称 Description		数量Q' ty						
				-2C	-6A	-2S	-6AS	-7	-8	-8A
1	3506098	Feed Bar	牙架	1		-		1	1	
	3506098S	Feed Bar	牙架	-		1		-	-	
2	403	Screw	内六角凹端螺钉M5×6	8		8		8	8	
3	406	Screw	内六角凹端螺钉M6×8	1		1		1	1	
4	103	Screw	圆柱头螺钉M4×8	1		1		1	1	
5	3506099	Feed Lift Eccentric Fork	抬牙叉	1		1		1	1	
6	3506100	Oil Felt	毛毡	1		1		1	1	
7	709	Nut	厚螺母	1		1		1	1	
8	3506101	Stud Bolt	螺栓	1		1		1	1	
9	902	Spring Washer	弹簧垫圈5	1		1		1	1	
10	101	Screw	圆柱头螺钉M3×6	1		1		1	1	
11	3506102	Needle Guard	护针块	1		1		1	-	
	3586102	Needle Guard	护针块	-		-		-	1	
12	3506103J	Feed Bar Shaft	牙架轴	1		1		1	1	
13	1004-5	Oil Wick	油绳	1		1		1	1	
14	3506104	Feed Rocker	牙架座	1		-		1	1	
	3506104S	Feed Rocker	牙架座	-		1		-	-	
15	3505079	Collar	挡圈	2		2		2	2	
16	3506105	Feed Rocker Shaft	送料轴	1		1		1	1	
17	1004-2	Oil Wick	油绳	1		1		1	1	
18	3506107	Stitch Regulating Stud	针距调节螺钉	1		1		1	1	
19	350612	Feed Drive Eccentric Ass' y	送料连杆组件	1		1		1	1	
20	3506108	Connection	送料连杆	1		1		1	1	
21	3504055	Screw	轴位螺钉	2		2		2	2	
22	3506110	Eccentric	送料偏心	1		1		1	1	
23	505	Screw	锥端螺钉M6×0.75×7	1		1		1	1	
24	3510196	Oil Felt	毛毡	1		1		1	1	
25	3506111	Flange Bushing	连杆调节轴套	1		1		1	1	
26	3506112	Washer	垫圈6	1		1		1	1	
27	706	Nut	厚螺母M6	1		1		1	1	
28	3506113	Feed Lift Eccentric	抬牙凸轮	1		1		1	1	
29	504	Screw	锥端螺钉M6×0.75×7.5	1		1		1	1	
30	3506114S	Eccentric, upper	上送料偏心	-		1		-	-	
31	3506115S	Connection, upper	上送料连杆	-		1		-	-	
32	NLM3×8	Screw	内六角紧定螺钉M3×8	-		1		-	-	
33	3506116S	Connection shaft, upper	上送料连杆轴	-		1		-	-	
34	3506117S	Connection drive rod, lower	上送料传动连杆（下）	-		1		-	-	
35	3506118S	Connection drive rod, upper	上送料传动连杆（上）	-		1		-	-	
36	3506119S	Stud, M8×130	螺柱M8×130	-		1		-	-	
37	3506120S	Spring	上送料压簧	-		1		-	-	
38	904	Screw	垫圈M8	-		2		-	-	
39	707	Screw	螺母M8	-		2		-	-	
40	3506121S	Stud, M8×66	六角头螺柱M8×66	-		1		-	-	
41	3506122S	Nut	蝶形螺母M8	-		1			-	

07 FEED Dog、THROAT PLATE & PRESSER FOOT PARTS
送料牙、针板与压脚部件

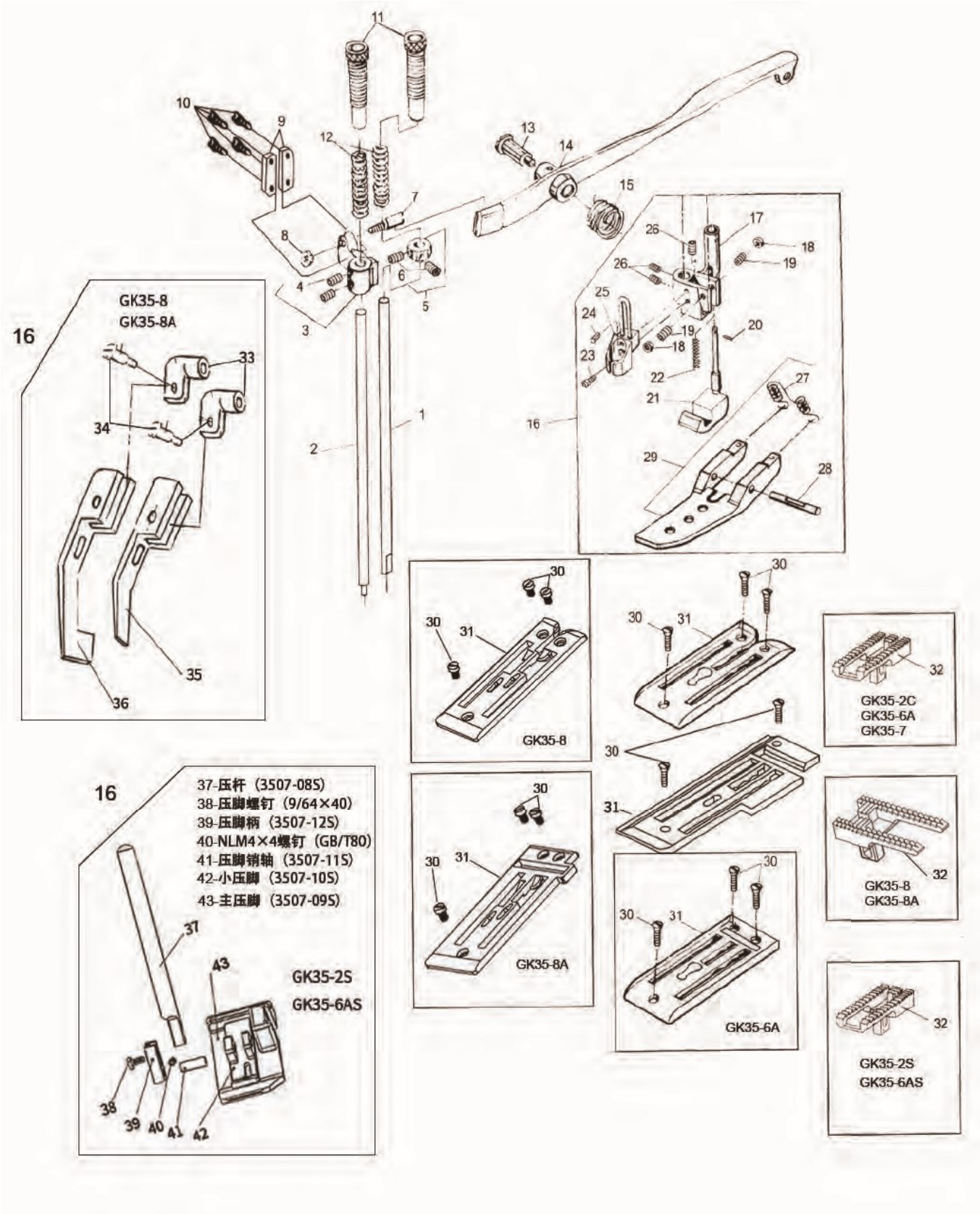

07 FEED Dog、THROAT PLATE & PRESSER FOOT PARTS
送料牙、针板与压脚部件

序号 Ref. No.	零部件件号 Part Number	零部件名称 Description		数量Q' ty						
				-2C	-2S	-6A	-6AS	-7	-8	-8A
1	3507124	Presser Bar, right	右压脚杆	1	1	1	1	1	–	–
	3587124(-8J)	Presser Bar, right	右压脚杆	–	–	–	–	–	1	1
2	3507125	Presser Bar, left	左压脚杆	1	1	1	1	1	–	–
	3587125(-8J)	Presser Bar, left	左压脚杆	–	–	–	–	–	1	1
3	3507126	Presser Foot Guide	压杆导架	1	1	1	1	1	–	–
	3587126(-8J)	Presser Foot Guide	压杆导架	–	–	–	–	–	1	1
4	403	Screw	平端螺钉M5×6	2	2	2	2	2	2	2
5	3505079	Collar	挡圈	1	1	1	1	–	1	1
6	403	Screw	平端螺钉M5×6	2	2	2	2	–	2	2
7	3507128	Lifting Screw	提升螺钉	1	1	1	1	–	1	1
8	702	Nut	螺母BM6	1	1	1	1	–	1	1
9	3507129	Guide Plate	导板	2	2	2	2	–	2	2
10	109	Screw	圆柱头螺钉M5×8	4	4	4	4	4	4	4
11	3507130	Spring Regulating Bushing	压簧调节螺套	2	2	2	2	2	2	2
12	3507131	Spring	压脚杆压簧	2	2	2	2	2	2	2
13	3507132	Stud for Lifter Lever	抬压脚螺钉	1	1	1	1	–	1	1
14	3507133	Presser Foot Lifter Lever	抬压脚扳手	1	1	1	1	–	1	1
15	3507134	Spring	扭簧	1	1	1	1	–	1	1
16	350714J	Presser Foot Ass' y	压脚组件	1	–	1	–	1	–	–
	358714J	Presser Foot Ass' y	压脚组件	–	–	–	–	–	1	1
	350714S	Presser Foot Ass' y	压脚组件	–	1	–	1	–	–	–
17	3507114J	Presser Foot Shank	压脚柄	1	–	1	–	1	–	–
18	701	Nut	螺母M5	2	–	2	–	2	–	–
19	404	Screw	平端螺钉M5×8	2	–	2	–	2	–	–
20	1007	Clamping Sleeve	开口销Φ1.2	2	–	2	–	2	–	–
21	3507136J	Chaining Section	小压脚	1		1	–	1	–	–
22	3507116	Spring	小压脚弹簧	1	–	1–	–	1	–	–
23	607	Screw	内六角螺钉M4×8	1	–	1		1		
24	1006	Clamping Sleeve	圆柱销Φ2×8	1	–	1	–	1	–	–
25	3507115	Finger Guard	压脚护针罩	1	–	1	–	1	–	–
26	403	Screw	平端螺钉M5×6	3	–	3	–	3	–	–
27	3507118	Spring	拉簧	1	–	1	–	1	–	–
28	3507140	Pin	销	1	–	1	–	1	–	–
29	3507141J	Presser Foot Bottom	压脚底板	1	–	1	–	1	–	–
30	202	Screw	沉头螺钉M5×12	3	3	3	3	3	3	3
31	3507142	Throat Plate	针板	1	–	–	–	–	–	–
	3507142S	Throat Plate	针板	–	1	–	–	–	–	–
	3567142	Throat Plate	针板	–	–	1	–	–	–	–
	3567142S	Throat Plate	针板	–	–	–	1	–	–	–
	3587142J	Throat Plate	针板	–	–	–	–	–	1	–
	3587142AJ	Throat Plate	针板	–	–	–	–	–	–	1
	3512218	Throat Plate	针板	–	–	–	–	1	–	–
32	3507143	Feed Dog	送料牙	1		1	–	1	–	–
	3587143J	Feed Dog	送料牙	–	–	–	–	–	1	1
	3507143S	Feed Dog	送料牙	–	1	–	1	–	–	–
33	3508-52	Presser foot shank	压脚柄	–	–	–	–	–	2	2
34	3508-55	Pin for Presser foot shank	压脚柄销钉	–	–	–	–	–	2	2
35	3508-51	Presser foot bottom,main	主压脚底板	–	–	–	–	–	1	1
36	3508-53	Presser foot bottom,auxiliary	副压脚底板	–	–	–	–	–	1	1

注：GK35-2S / GK35-6AS压脚机构的零件名称和图号，请参考零件分解图。

08 CUTTER PARTS (GK35-2C,GK35-2S,GK35-8)

线辫切刀部件（GK35-2C,GK35-2S,GK35-8）

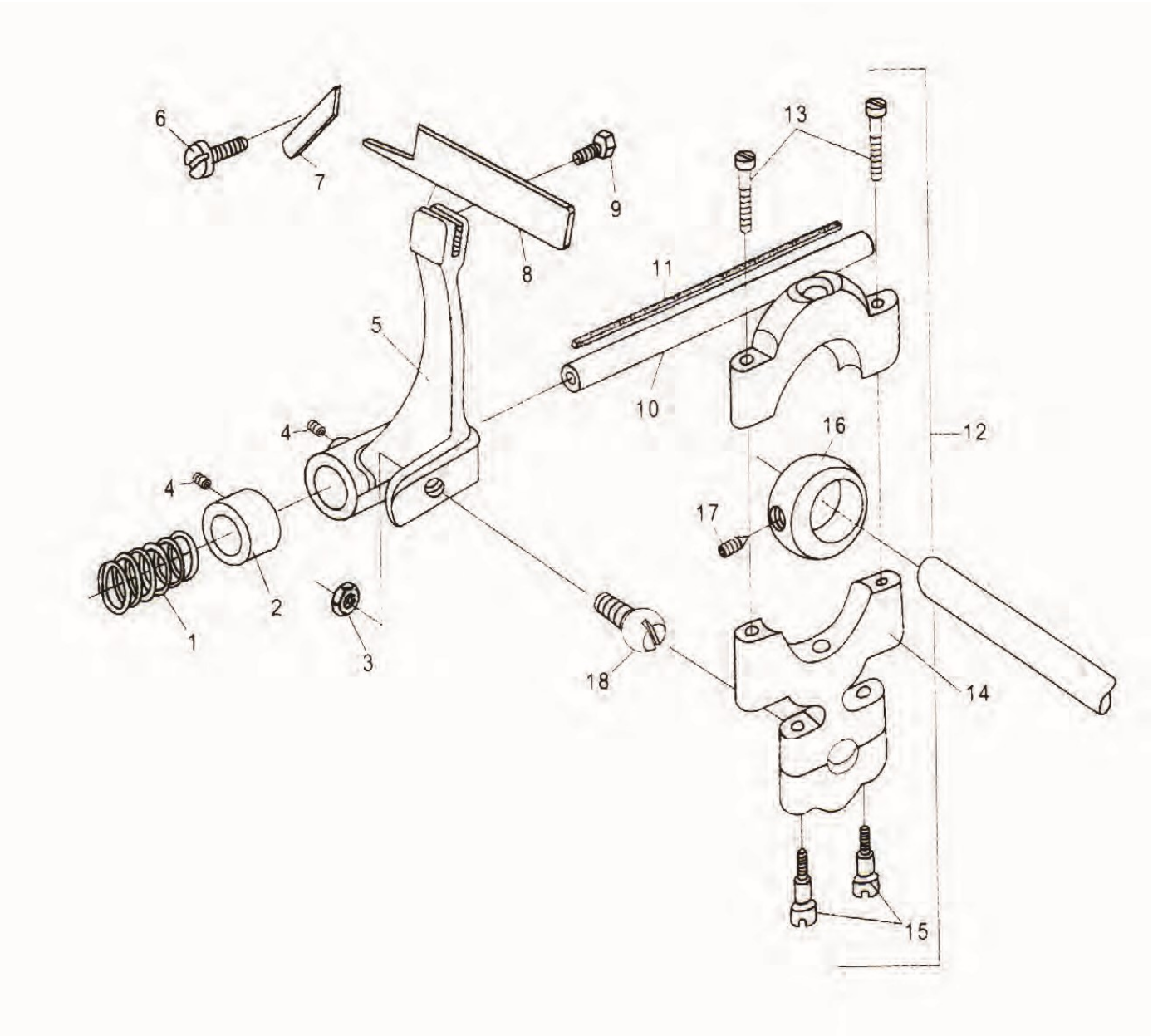

08 CUTTER PARTS (GK35-2C,GK35-2S,GK35-8)
线辫切刀部件(GK35-2C,GK35-2S,GK35-8)

序号 Ref. No.	零部件件号 Part Number	零部件名称 Description		数量Q' ty		
				-2C	-2S	-8
1	3509172	Spring	弹簧	1	1	1
2	3509173	Collar	挡圈	1	1	1
3	702	Nut	螺母BM6	1	1	1
4	403	Screw	平端螺钉M5×6	2	2	2
5	3509174J	Holder for Cutter	剪刀架	1	1	1
6	109	Screw	圆柱头螺钉M5×8	1	1	1
7	3509175	Knife	剪刀定片	1	1	1
8	3509176J	Cutting Steel	剪刀动片	1	1	1
9	301	Screw	六角螺钉M4×6	1	1	1
10	3509177	Shaft	剪刀架轴	1	1	1
11	1004-3	Oil Wick	油绳	1	1	1
12	350917	Connecting Bar Ass' y for Cutter	剪刀连杆组件	1	1	1
13	3509178	Screw	轴位螺钉	2	2	2
14	3509179	Connecting Bar for Cutter	剪刀连杆	1	1	1
15	3505085	Screw	轴位螺钉	2	2	2
16	3509181	Eccentric for Cutter	剪刀偏心	1	1	1
17	501	Screw	锥端螺钉M5×6	1	1	1
18	3509182	Bearing	球轴承	1	1	1

09 CUTTER PARTS&PRESSER FOOT LIFTER LEVER(GK35-7)

切刀与压脚扳手部件(GK35-7)

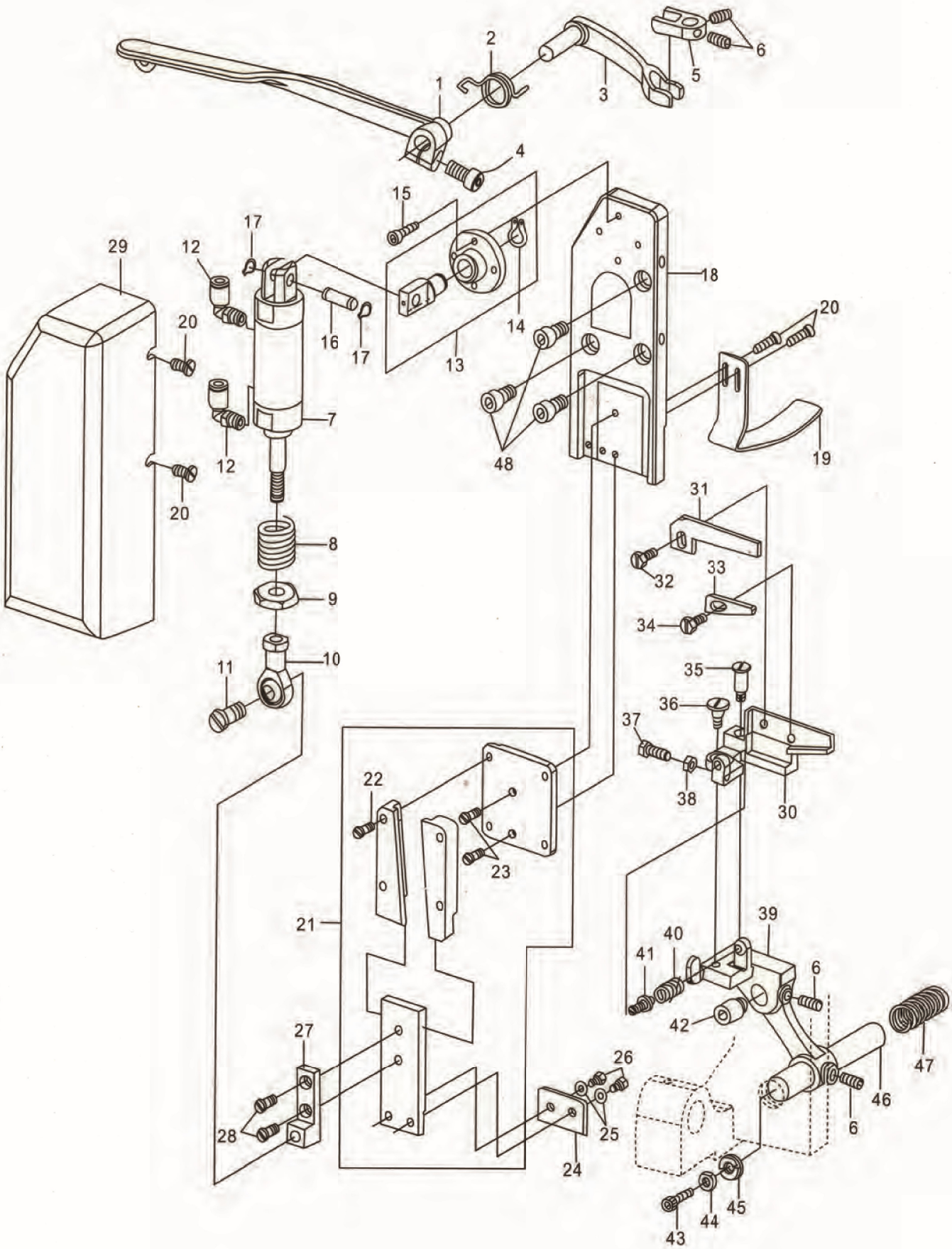

09 CUTTER PARTS&PRESSER FOOT LIFTER LEVER(GK35-7)
切刀与压脚扳手部件(GK35-7)

序号 Ref. No.	零部件件号 Part Number	零部件名称 Description		数量Q' ty GK35-7
1	6809020	Presser Foot Lifter Lever	抬压脚扳手	1
2	3507134	Spring	扭簧	1
3	6809019	Presser Foot Lifter Connecting Fork	抬压脚叉	1
4	NLP610	Screw	内六角平圆头螺钉M6X10	2
5	6809025	Presser Foot Lifting Bracket	左压脚定位叉	1
6	403	Screw	平端螺钉M5X6	4
7	J01002G	Air Cylinder	气缸	1
8	305221	Spring	弹簧	1
9	3512224	Nut	缓冲弹簧垫螺母	1
10	SI8T/K	Rod End	切刀连杆	1
11	3512204	Pin	连杆销	1
12	D07034	Tube Fitting, elbow	弯管接头	2
13	351220	Air Cylinder Base Ass' y, Lower	气缸上座组件	1
14	IRS-12	Collar	挡圈	1
15	603	Screw	内六角螺钉M5X16	4
16	106201	Pin	气缸座销	1
17	IRS-8	Collar	挡圈	2
18	3512203	Cylinder bottom	气缸底板	1
19	3512213	Plate	护袋板	1
20	109	Screw	圆柱头螺钉M5X8	5
21	106032C	Oscillating Plate Ass' y	滑块刀架组件	1
22	11/64S40061	Screw	螺钉	4
23	3-19	Screw	螺钉	2
24	106053	Upper Knife	上刀	1
25	11/64W1503	Washer	垫圈	2
26	11/64S28004	Screw	螺钉	2
27	3512205	Lower Air Cylinder Base	气缸下座	1
28	15/64S28004	Screw	螺钉	2
29	3512206	Cylinder Cover	气缸罩壳	1
30	3512207	Lower Knife Base	下刀架	1
31	106083	Lower Knife	下刀	1
32	11/64S40093	Screw	螺钉	1
33	106093	Lower Knife Stopper	下刀挡块	1
34	9/64S40005	Screw	螺钉	1
35	11/64S40059	Screw	螺钉	1
36	11/64S40060	Screw	螺钉	1
37	9/64S40067	Screw	螺钉	1
38	9/64N40101	Nut	螺母	1
39	3512208	Lower Knife Base Connection	下刀架座	1
40	106171	Spring	弹簧	1
41	106161	Screw	下刀弹簧调节螺钉	1
42	3512209	Pin	下刀架座支销	1
43	4B5X15	Screw	内六角螺钉M5X15	1
44	701	Nut	螺母M5	1
45	3512228	Plug Bush	轴塞	1
46	3512210	Axis	下刀架座轴	1
47	3512229	Spring	切刀弹簧	1
48	NL816	Screw	内六角螺钉M8X16	1
				3

10 AIR CYLINDER DRIVE CUTTER PARTS (GK35-6A-6AS,GK35-8A)

气动切刀部件 (GK35-6A,GK35-6AS,GK35-8A)

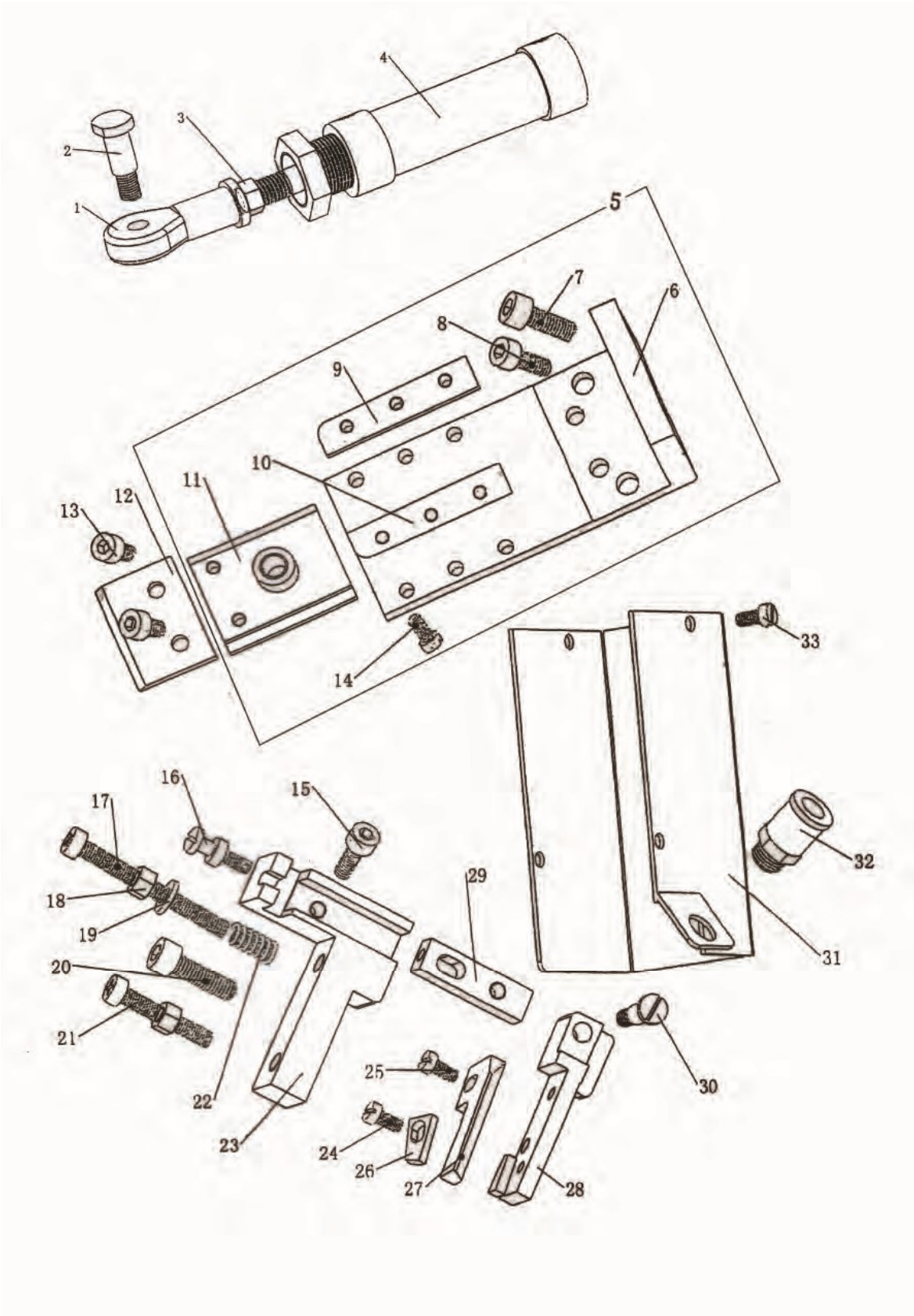

10 AIR CYLINDER DRIVE CUTTER PARTS (GK35-6A-6AS,GK35-8A)
气动切刀部件 (GK35-6A,GK35-6AS,GK35-8A)

序号 Ref. No.	零部件件号 Part Number	零部件名称 Description		数量Q' ty		
				-6A	-6AS	-8A
1	356001J	Bearing	SI10E杆端关节轴承	1	1	1
2	356002J	Screw	气缸连接螺钉	1	1	1
3	M10	Nut	M10螺母	1	1	1
4	356003J	Air cylinder	25×25气缸	1	1	1
5	35601J	Upper knife base Ass'y	上刀座总成	1	1	1
6	356004J	Upper knife base	上刀架主体	1	1	1
7	NLM6×16	screw	M6×16内六角圆柱头螺钉	2	2	2
8	NLM5×14	screw	M5×14内六角圆柱头螺钉	2	2	2
9	356005J	LaMel, left	压刀板左	1	1	1
10	356006J	LaMel, right	压刀板右	1	1	1
11	356007J	Upper knife support	上刀片座	1	1	1
12	356008J	Upper knife	上刀	1	1	1
13	NLM5×6	screw	M5×6内六角圆柱头螺钉	2	2	2
14	YTM5×8	screw	M5×8圆柱头螺钉	6	6	6
15	NLM5×14	screw	M5×14内六角圆柱头螺钉	1	1	1
16	356009J	Adjust screw	调节螺钉	1	1	1
17	YTM5×50	screw	M5*50圆柱头螺钉	1	1	1
18	M5	Nut	M5螺母	4	4	4
19	φ5	Washer	φ5垫片	1	1	1
20	NLM6×20	screw	M6×20内六角圆柱头螺钉	2	2	2
21	YTM5×30	screw	M5×30圆柱头螺钉	1	1	1
22	356010J	Spring	下刀弹簧	1	1	1
23	356011J	Lower knife base	下刀架座	1	1	1
24	NLM4×8	screw	M4×8内六角圆柱头螺钉	2	2	2
25	11/64	screw	11/64×40×8圆柱头螺钉	1	1	1
26	356012J	Wedge	楔板	1	1	1
27	356013J	Lower knife	下刀	1	1	1
28	356014J	Lower knife support	下刀架	1	1	1
29	356015J	Lower knife support plate	下刀架托板	1	1	1
30	356016J	Screw for Lower knife support	下刀架长螺钉	1	1	1
31	356017J	Shield	护罩	1	1	1
32	356018J	Trachea connector	φ6气管接头	3	3	3
33	YTM4×6	screw	M4×6圆柱头螺钉	4	4	4

GK35 automatic sewing machine controller instructions
GK35系列自动缝包机控制系统说明

控制器按键操作说明
Instructions of controller

① 按住“清零”键 2 秒以上，计数清零。
Press button “清零” more than 2s, clear number.

② 按住“时间”键2秒以上，可以调节缝包机电机延时停机时间（范围0001-0030），该数值越长，右侧线辫长度越长。
Press button “时间” more than 2s, adjust the delay time of motor stop working.

③ 按住“清零”键 2 秒后，同时长按“时间”键，调节切线时间（范围 1001-1030），该数值越大，切线时间越晚，切线后留在缝包机上的线辫越短。
Press button “时间”/ “清零” at the same time, adjust cutter starting time.

④ 按住“清零”键 5 秒以上，调节气缸推出后的停留时间（范围 7001-7010），该数值越大，气缸推出后停留的时间越长。
Press button “清零” more than 5s, adjust the average trigger action time of the solenoid valve for air cylinder.

缝包机接线说明
Wiring diagram

缝包机上引出了一根四芯线，其中，红色和绿色线接380V的任意两相；蓝色和黄（或白）色线为常开触点，接接触器控制线。

There is a four-core thread on the sewing machine, and connect the red and green ones to the 380V, blue and yellow (or white) ones to AC contactor.

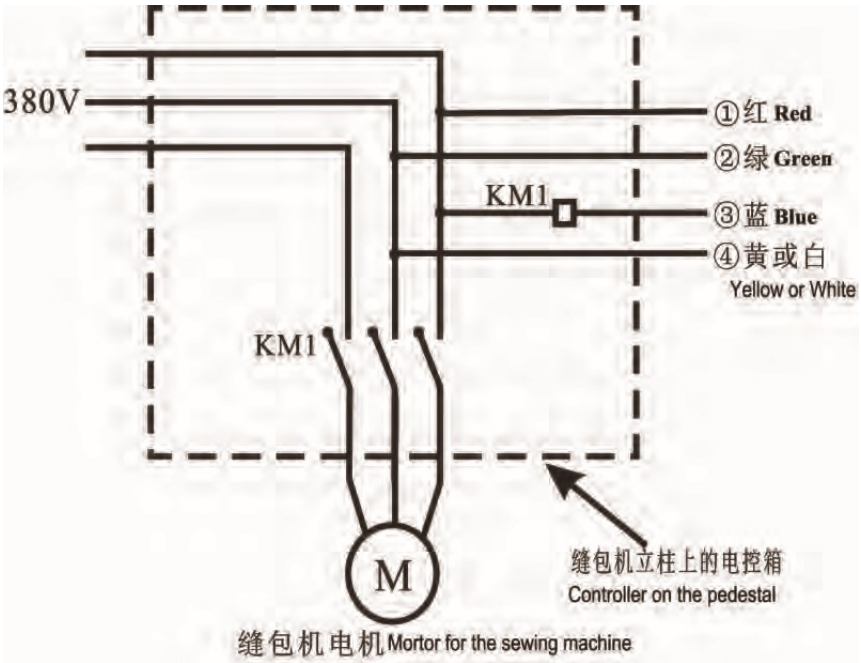

（该接线图适用于线圈电压为380V的接触器）

Installation Measurement Drawing for the Equipment
机器安装尺寸图

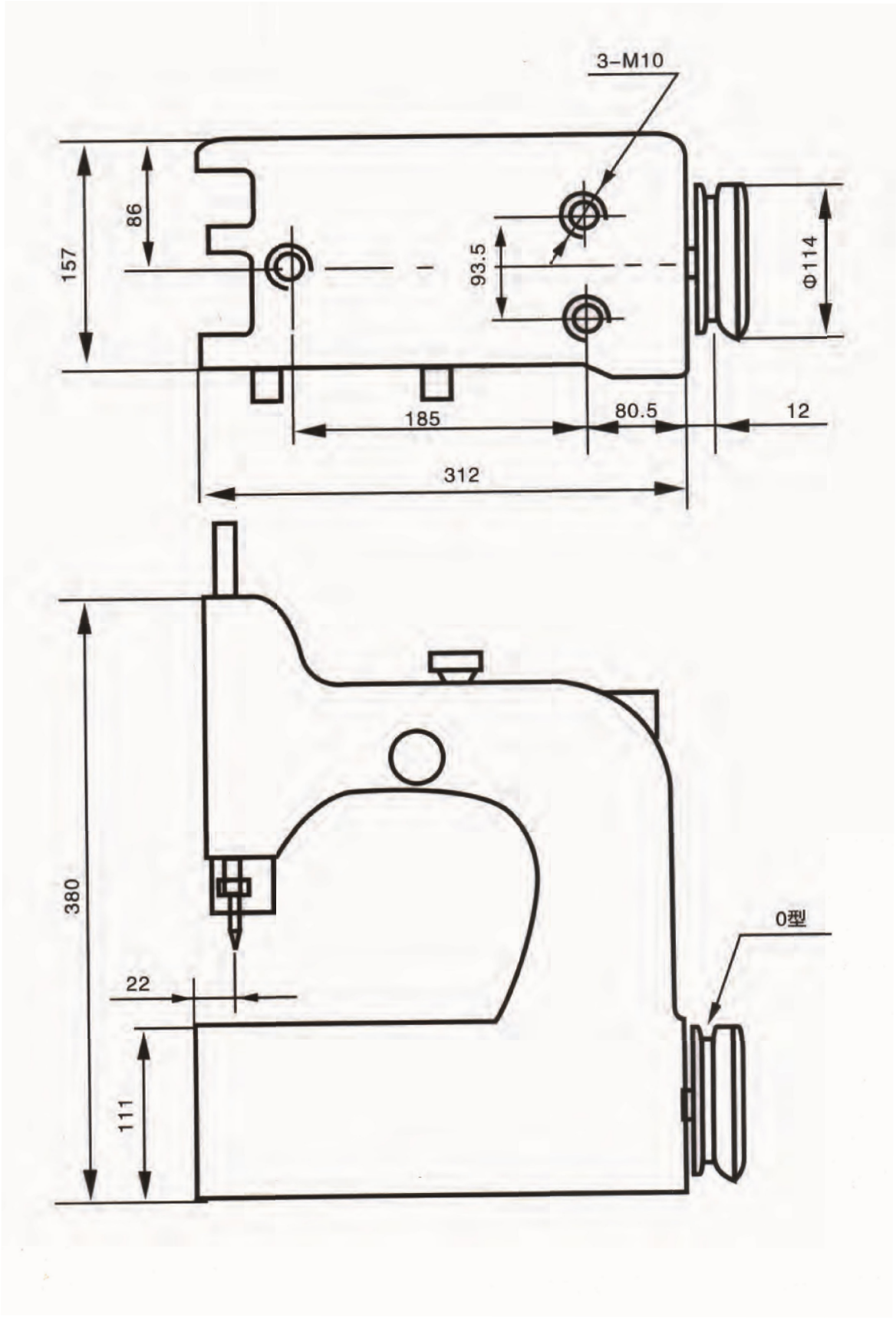

机器附件

序号	名　　称	Description	规　格	数　量
1	镊子	Tweezers		1
2	双头扳手	Double jawed wrench	5.5×7	1
3	双头扳手	Double jawed wrench	8×10	1
4	内六角扳手	Hexagon socket head Wrench	4mm	1
5	内六角扳手	Hexagon socket head Wrench	5mm	1
6	油枪	Oil gun		1
7	螺钉旋具	Screwdriver	75mm	1
8	螺钉旋具	Screwdriver	225mm	1
9	螺钉旋具	Screwdriver	250mm	1
10	机针	Needle	80800×250	1包
11	刀片	Knift cutiing steel		1付

机 器 使 用 要 求

机器用前要检查，运转声音需正常；加油工作要按时，每天至少二三次
穿线顺序要正确，说明书上见图 2；缝线张力要适中，面线稍紧底线松
操作方法要规范，手扶缝包禁拉扯；调节针距要注意，机针挡块勿相碰
更换机针要牢记，凹形朝前插到底；缝送速度要同步，缝纫性能有好处
机械性能要保持，用后除污紧螺丝；保养机器要勤劳，使用寿命就提高

Product
产品

缝包机机头

GK35-6AS

GK35-6A

GK35-8A

自动折边机组

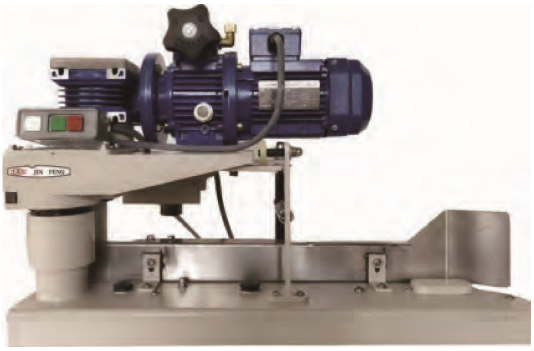

ZB4900袋子折边机

ZB6900加长袋子折边机

LFS形缝包机组

LFS型可调速输送机

津之縫（天津）自动化科技有限公司

JinZhiFeng(tianjin)Automation Technology Co., Ltd.

电话:022-23238126

传真:022-24567385

销售热线:18526877078

网址:www.jzf-tj.com

邮箱:jinzhifeng01@126.com